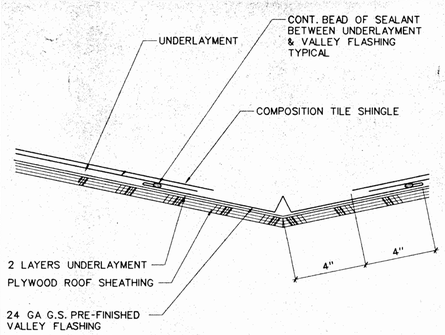

A1 VALLEY FLASHING
3"=1'-0"
076-106 .dgn

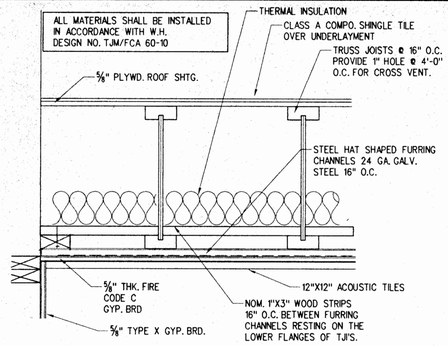

A2 1-HR ROOF ASSEMBLY
1½"=1'-0"
MHDET065.dgn

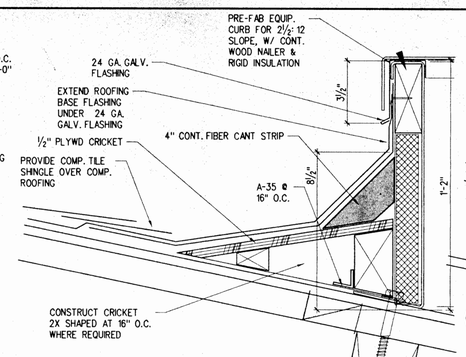

A3 CRICKET AT PRE-FAB CURB
1"=1'-0"
077-008b.dgn

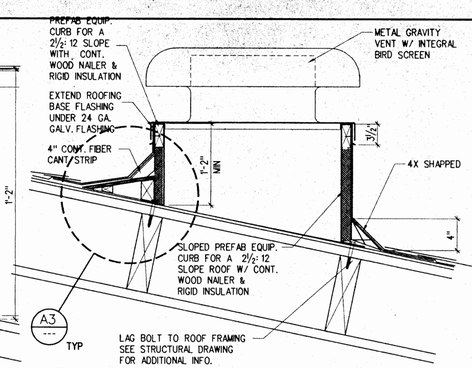

A4 SLOPPED PREFAB CURB
1"=1'-0"
077-008a.dgn

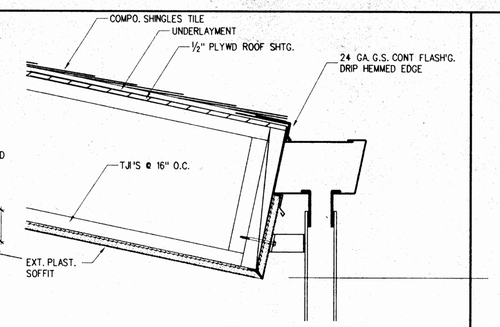

A5 GUTTER @ EAVE
1½" =1'-0"
076-022A.dgn

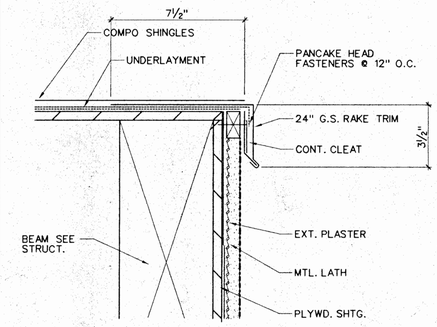

B1 FASCIA FLASHING
3"=1'-0"
CLDET102.dgn

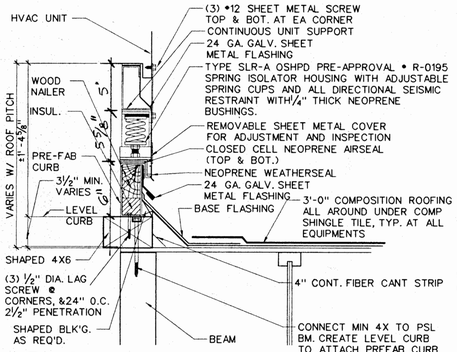

B2 SPRING ISOLATOR
1½"=1'-0"
mmdet014.dgn

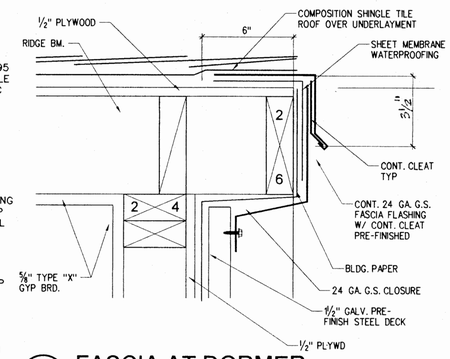

B3 FASCIA AT DORMER
3"=1'-0"
mmdet063.dgn

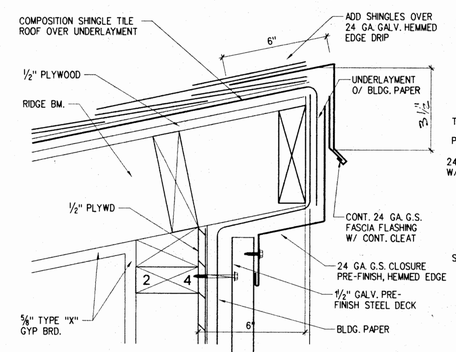

B4 FASCIA AT DORMER
3"=1'-0"
mmdet064.dgn

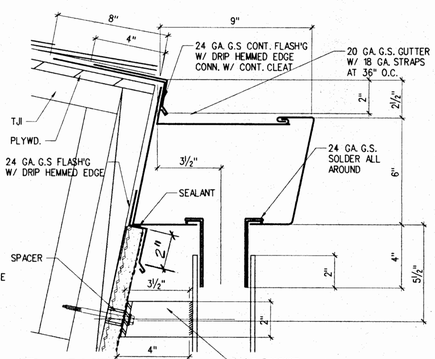

B5 GUTTER
3"=1'-0"
GUTTER.dgn

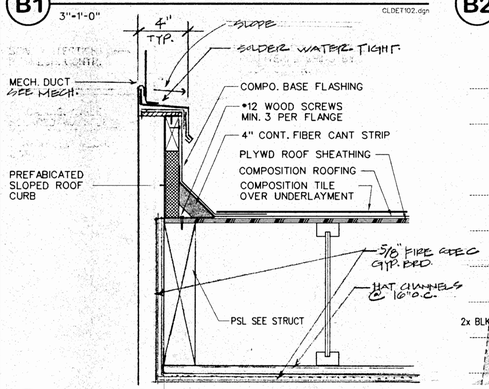

C1 DUCT CURB
1½"=1'-0"
077-005 .dgn

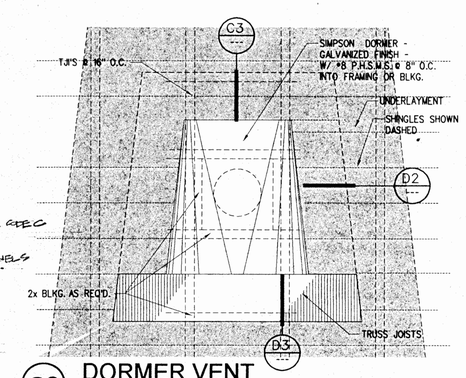

C2 DORMER VENT
1"=1'-0"
EDDET084.dgn

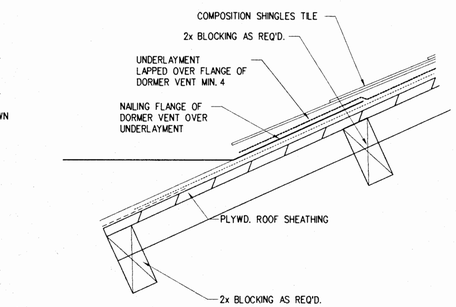

C3 DORMER FLASHING
3"=1'-0"
mmdet085.dgn

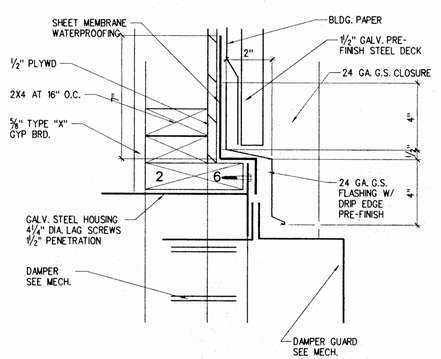

C4 FAN AT DORMER
3"=1'-0"
mmdet068 .dgn

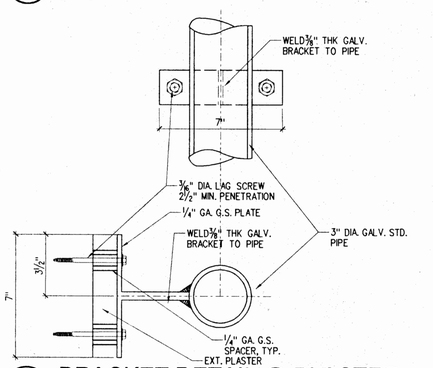

C5 BRACKET DETAIL @ PLASTER
3"=1'-0"
mmdet050.dgn

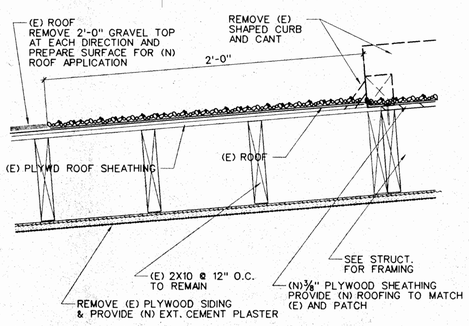

D1 SKYLIGHT DEMOLITION
1½"=1'-0"
MMDET027 .dgn

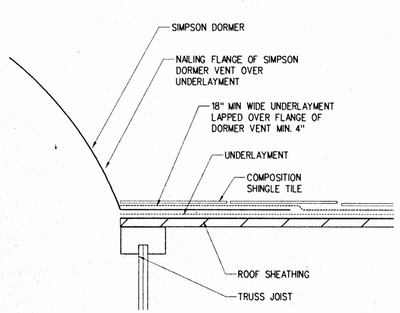

D2 DORMER FLASHING
3"=1'-0"
EDDET086.dgn

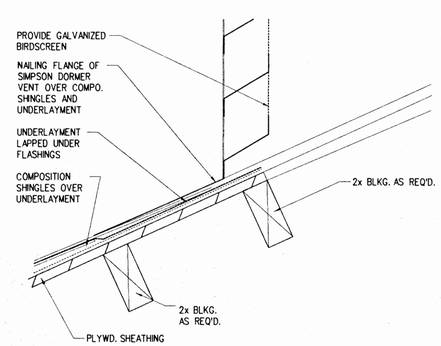

D3 DORMER FLASHING
3"=1'-0"
EDDET087.dgn

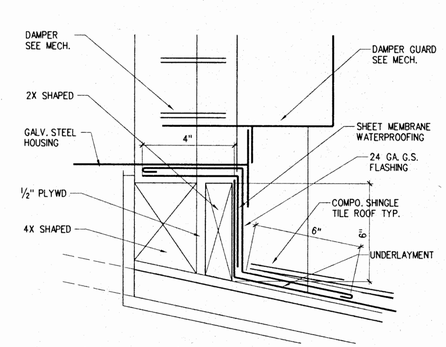

D4 FAN AT DORMER
3"=1'-0"
mmdet069.dgn

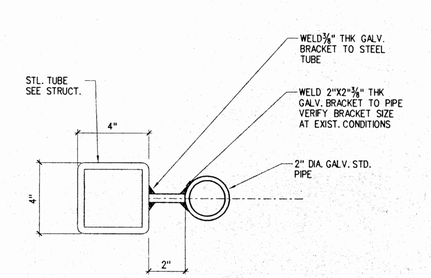

D5 BRACKET DETAIL @ STL. TUBE
3"=1'-0"
mmdet051.dgn

Exterior Detail - Roof

CARMICHAEL-KEMP ARCHITECTS AIA
2820 LOS FELIZ BLVD. GLENDALE, CALIFORNIA 91204 (818) 243-2820 FAX (818) 243-2865

LICENSED ARCHITECT C-20952 STATE OF CALIFORNIA

IDENTIFICATION STAMP DIV. OF ARCHITECT PROJECT OFFICE OF REGULATION SERVICES
APPL NO 4-101516
AC FLS SS
DATE DEC 1 4 1999

NEW SCIENCE BUILDING at MT. MIGUEL HIGH SCHOOL
1800 Sweetwater Road, Spring Valley, CA 91977
GROSSMONT UNION HIGH SCHOOL DISTRICT

JOB NO.	9822-1
DATE:	12-14-99
SHEET NUMBER	T-601
BINDING ORDER	42 of 82

n:\grossmont\9822-1\t-601.sht Dec 06 1999 12:20:00

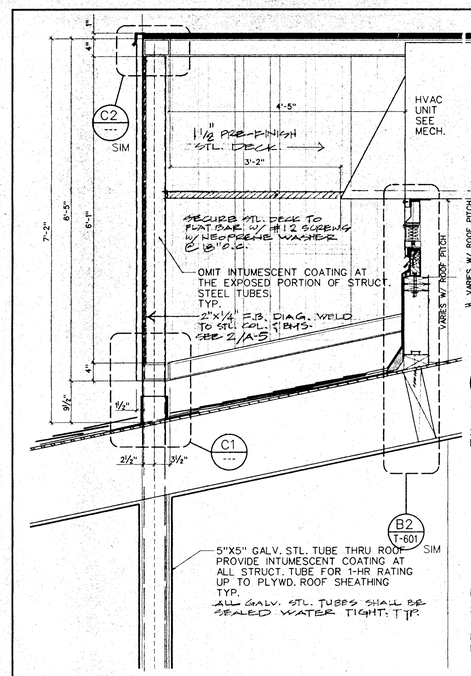

B1 STEEL TUBE THRU ROOF
3/4"=1'-0"
mmdet013a.dgn

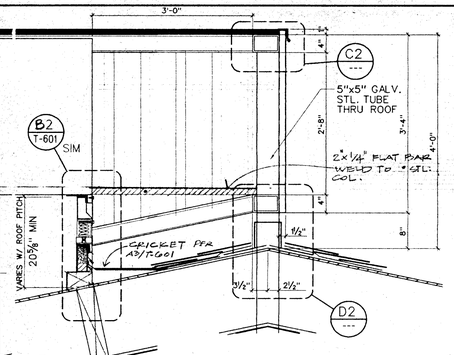

A2 STEEL TUBE THRU ROOF
3/4"=1'-0"
mmdet012a.dgn

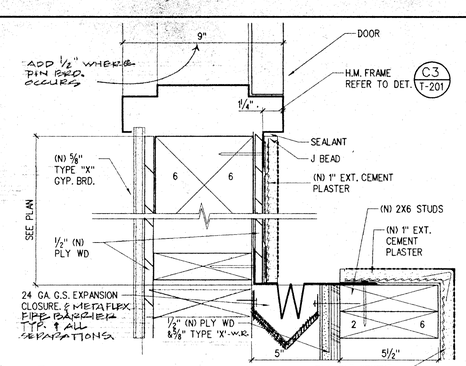

A3 EXPANSION JOINT
3"=1'-0"
JAMB01 .dgn

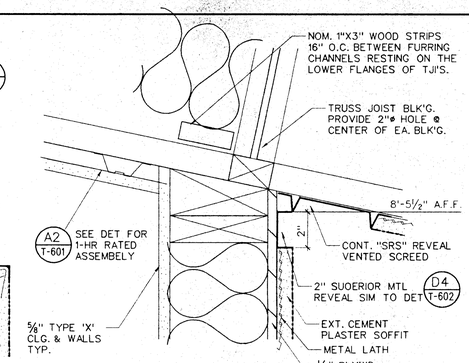

A4 PLASTER SOFFIT
3"=1'-0"
MMDET108.dgn

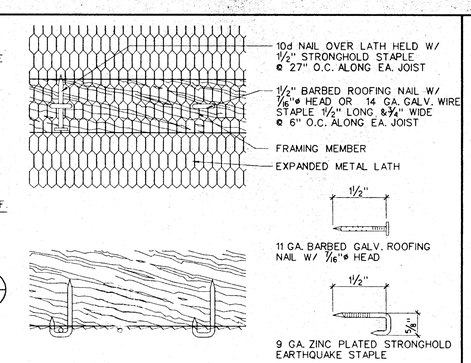

A5 METAL LATH NAILING
NO SCALE
091-016 .dgn

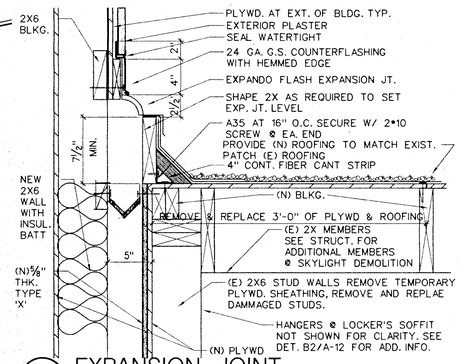

B2 EXPANSION JOINT
1 1/2"=1'-0"
076-107 .dgn

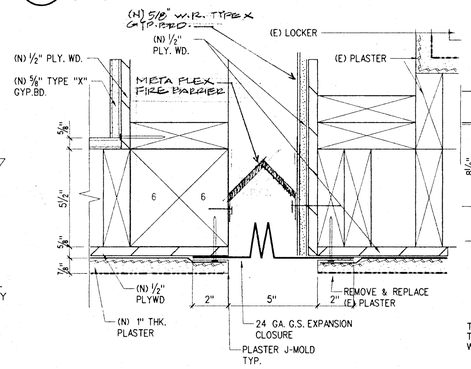

B3 EXPANSION JOINT
3"=1'-0"
JAMB02 .dgn

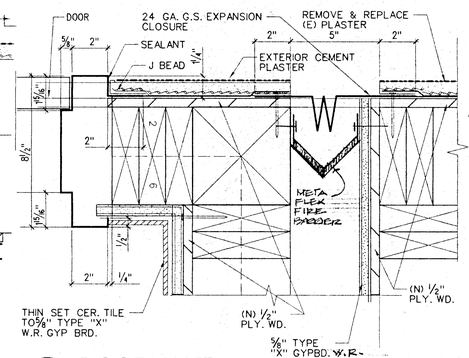

B4 DOOR JAMB
3"=1'-0"
mmdet021.dgn

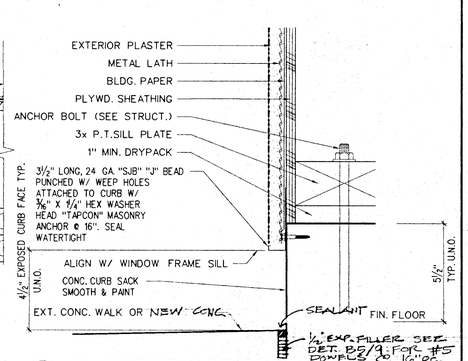

B5 PLASTER SCREED @ SILL
3"=1'-0"
MHDET051.dgn

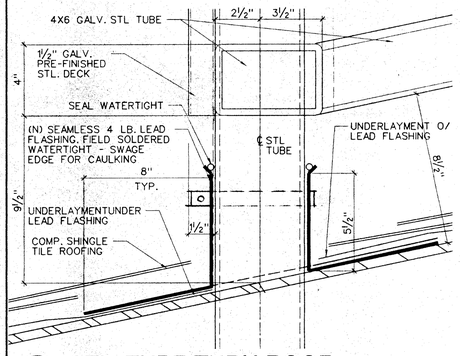

C1 STL. TUBE THRU ROOF
3"=1'-0"
mmdet041.dgn

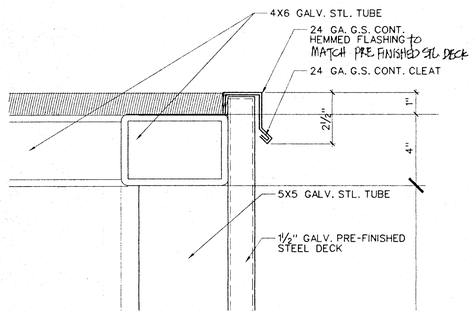

C2 STL. DECK @ TOP
3"=1'-0"
mmdet040.dgn

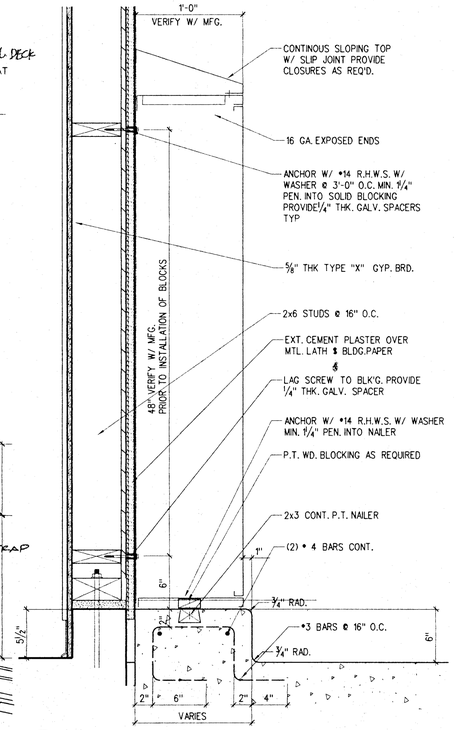

D3 WALL LOCKER ATTACHMENT
1 1/2"=1'-0"
mmdet004.dgn

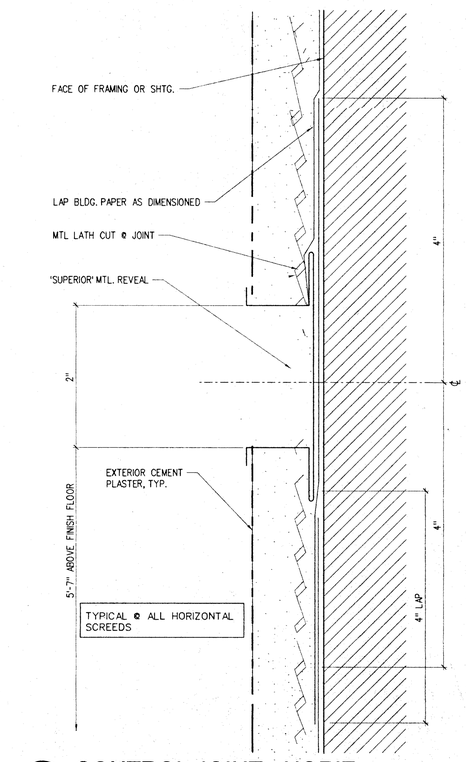

D4 CONTROL JOINT - HORIZ.
FULL SIZE
MHDET148.dgn

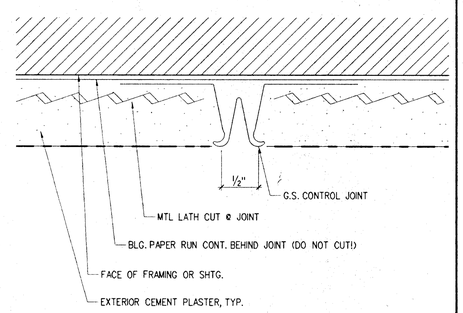

C5 CONTROL JOINT - VERTICAL
FULL SIZE
MHDET059.dgn

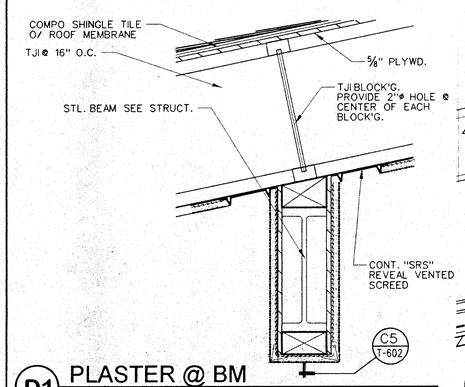

D1 PLASTER @ BM
1 1/2"=1'-0"
mmdet107.dgn

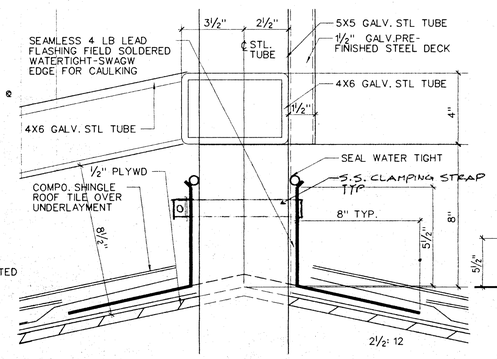

D2 STL TUBE THRU ROOF
3"=1'-0"
mmdet039.dgn

CARMICHAEL-KEMP ARCHITECTS AIA
2870 LOS FELIZ PLACE • LOS ANGELES • 90039 • 323/661.1265

IDENTIFICATION STAMP DIV. OF THE STATE ARCHITECT OFFICE OF REGULATION SERVICES
APPL NO 4-101516
AC G FLS SS
DATE DEC 1 8 1999

NEW SCIENCE BUILDING at MT. MIGUEL HIGH SCHOOL
1800 Sweetwater Road, Spring Valley, CA 91977
GROSSMONT UNION HIGH SCHOOL DISTRICT

Exterior Details - Walls

JOB NO.	9822-1
DATE:	12-14-99
SHEET NUMBER	T-602
BINDING ORDER	43 OF 82

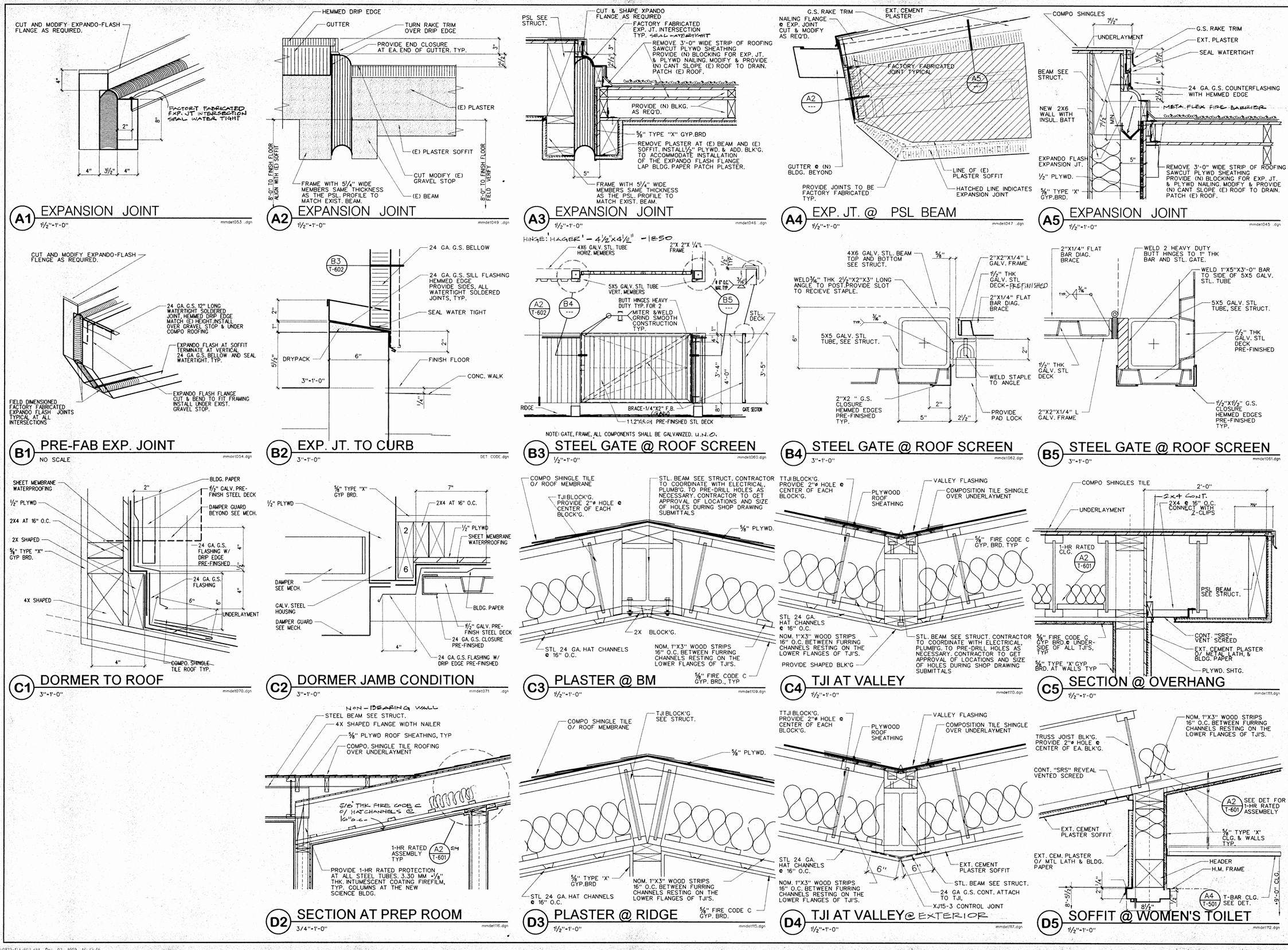

CARMICHAEL-KEMP ARCHITECTS AIA
23970 OSTERI/PLACE • LOS ANGELES • 90039 • 323/660-1265

IDENTIFICATION STAMP
DIV. OF STATE ARCHITECT
OFFICE OF REGULATION SERVICES
APPL NO 4-101516
AC FLS SS
DATE DEC 1 4 1999

NEW SCIENCE BUILDING at MT. MIGUEL HIGH SCHOOL
1800 Sweetwater Road, Spring Valley, CA 91977

GROSSMONT UNION HIGH SCHOOL DISTRICT

Exterior Details - Walls & Soffit

JOB NO.	9822-1
DATE:	12-14-99
SHEET NUMBER	T-603
BINDING ORDER	44 OF 82

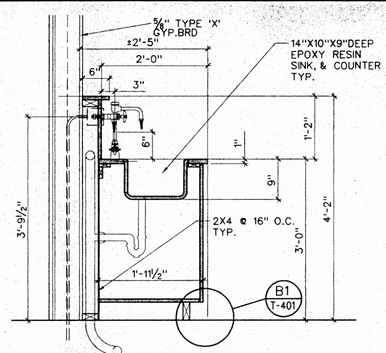

A1 SINK AT CASEWORK
¾"=1'-0"
mmdet091.dgn

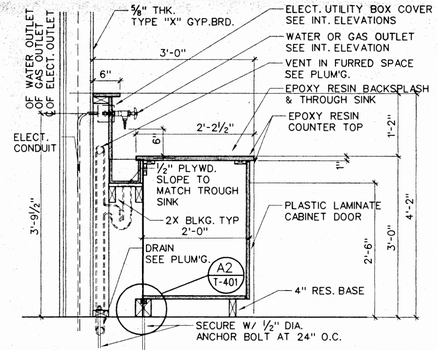

A2 LAB CASEWORK AGAINST WALL
¾"=1'-0"
mmdet092.dgn

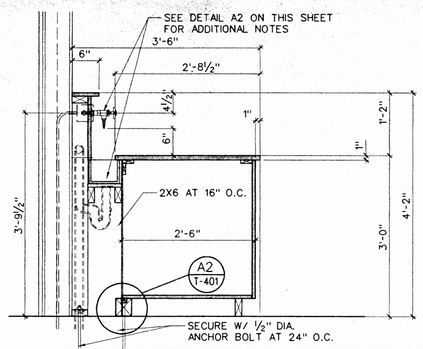

A3 LAB CASEWORK AGAINST WALL
¾"=1'-0"
mmdet093.dgn

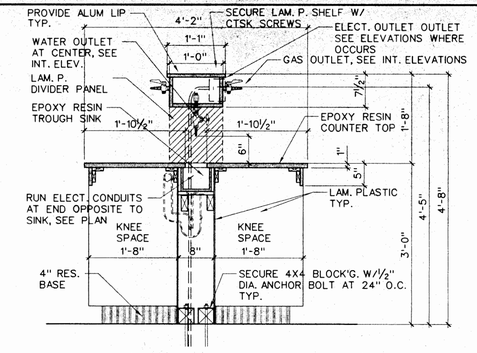

A4 LAB CASEWORK AT ISLAND
¾"=1'-0"
mmdet094.dgn

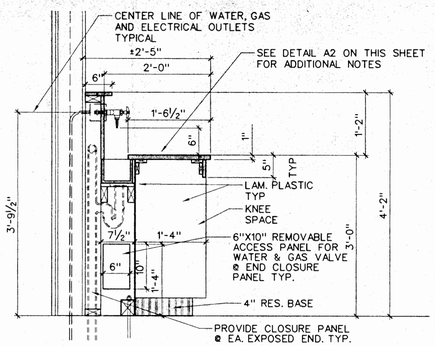

A5 LAB CASEWORK AGAINST WALL
¾"=1'-0"
mmdet095.dgn

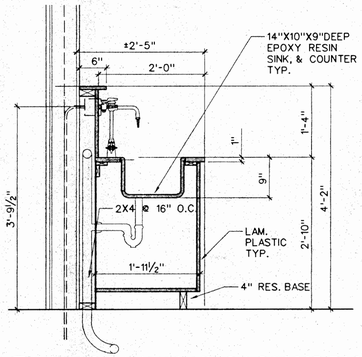

B1 HDCP SINK AT CASEWORK
¾"=1'-0"
mmdet096.dgn

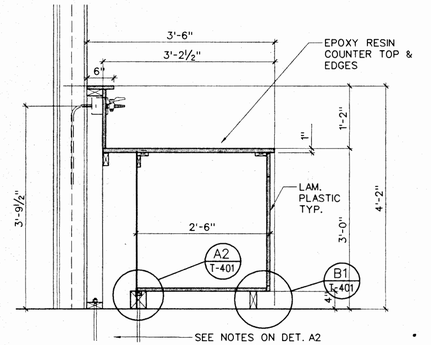

B2 CASEWORK AT RM-101
3/4 "=1'-0"
mmdet097.dgn

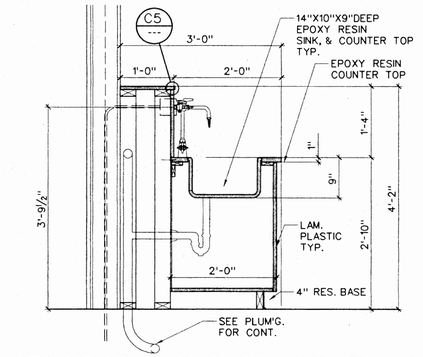

B3 HDCP SINK CASEWORK RM-101
¾"=1'-0"
mmdet098.dgn

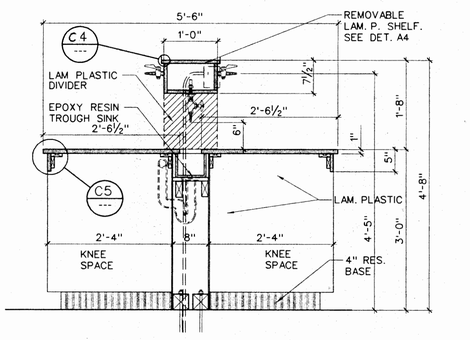

B4 SECTION - STUDENT ISLAND
¾"=1'-0"
mmdet099.dgn

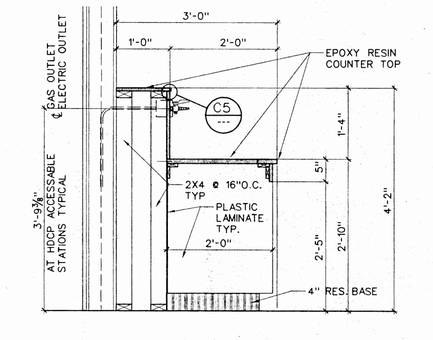

B5 HDCP CASEWORK @ RM. 101
¾"=1'-0"
mmdet100.dgn

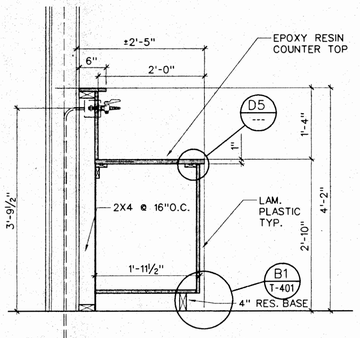

C1 HDCP HEIGHT CASEWORK
3/4 "=1'-0"
mmdet101.dgn

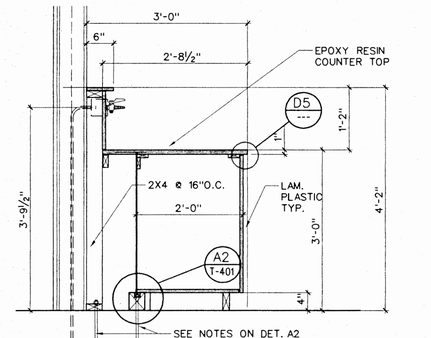

C2 CASEWORK AT RM-101
3/4 "=1'-0"
mmdet102.dgn

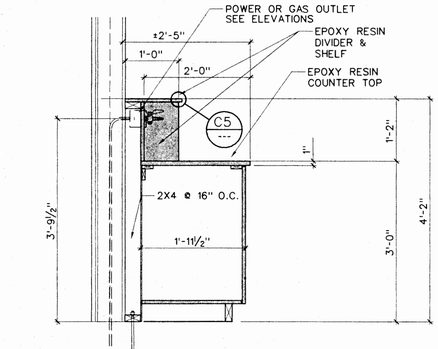

C3 CASEWORK AT RM-101
3/4 "=1'-0"
mmdet103.dgn

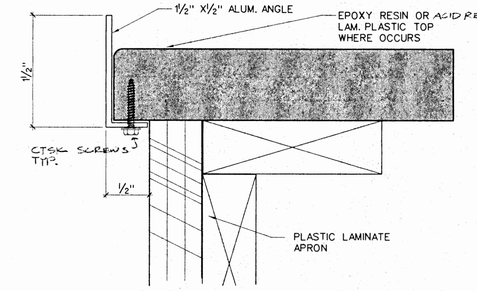

C4 ALUM. LIP DETAIL
FULL SIZE
mmdet106.dgn

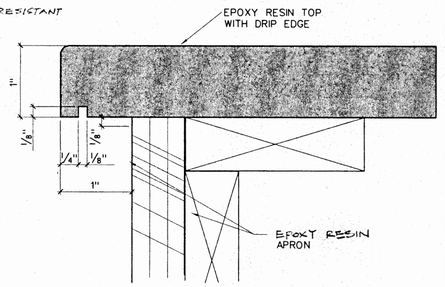

C5 EPOXY RESIN TOP @ APRON
FULL SIZE
064-101a.dgn

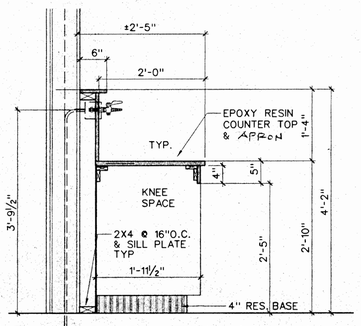

D1 HDCP STATION
3/4 "=1'-0"
mmdet104.dgn

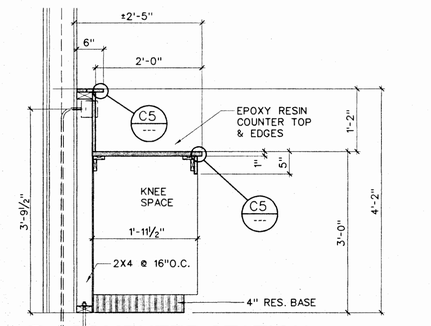

D2 COMPUTER STATION
3/4 "=1'-0"
mmdet105.dgn

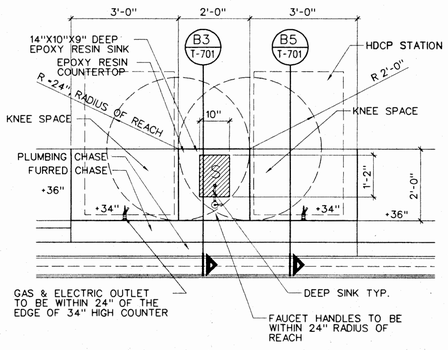

D3 KNEE SPACE @ HDCP STATION
½"=1'-0"
DET CODE.dgn

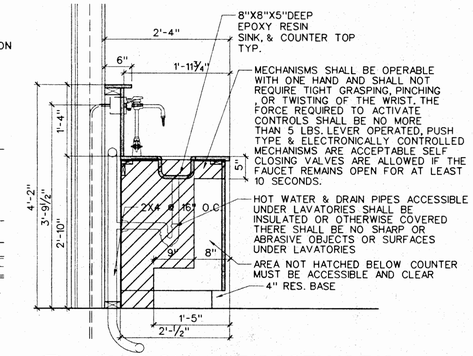

D4 HDCP SINK AT CASEWORK
¾"=1'-0"
mmdet114.dgn

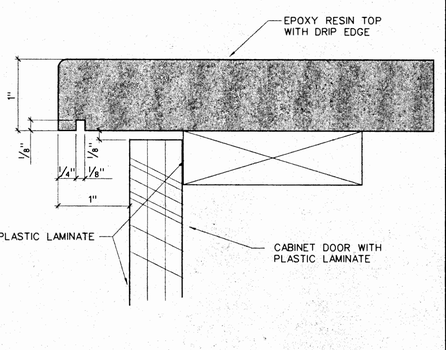

D5 EPOXY RESIN TOP & EDGE
FULL SIZE
064-101.dgn

CASEWORK DETAILS

CARMICHAEL-KEMP ARCHITECTS AIA
2807 OCEAN PARK BLVD. • SANTA MONICA, CA 90405 • 310/392-1265

LICENSED ARCHITECT • TAMARA J. SCHAEFFER • C 20592 • EXP. 12-31-99 • STATE OF CALIFORNIA

IDENTIFICATION STAMP
DIV. OF THE STATE ARCHITECT
OFFICE OF REGULATION SERVICES
APPL. NO. 4-101516
AC ___ FLS ___ SS ___
DATE DEC 14 1999

NEW SCIENCE BUILDING at MT. MIGUEL HIGH SCHOOL
1800 Sweetwater Road, Spring Valley, CA 91977
GROSSMONT UNION HIGH SCHOOL DISTRICT

JOB NO.	9822-1
DATE:	12-14-99
SHEET NUMBER	T-701
BINDING ORDER	45 of 82

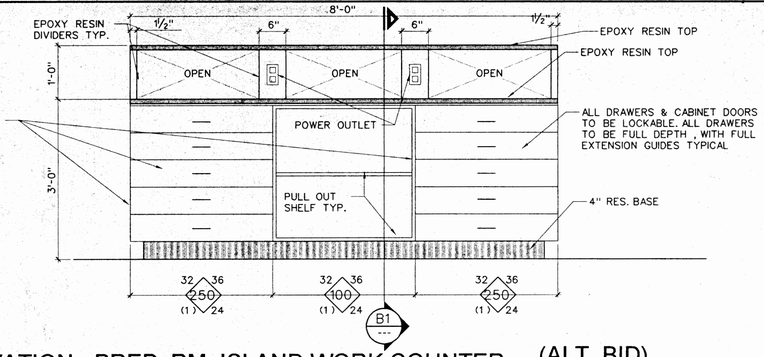

A1 ELEVATION - PREP. RM. ISLAND WORK COUNTER (ALT. BID)

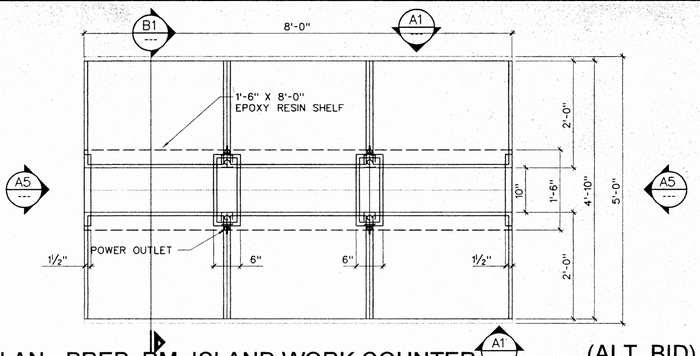

A3 PLAN - PREP. RM. ISLAND WORK COUNTER (ALT. BID)

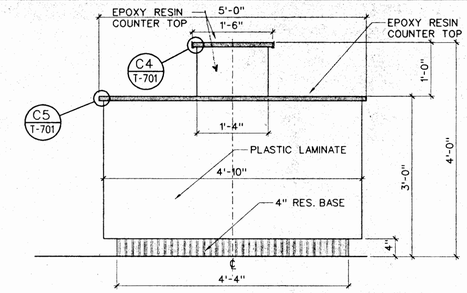

(ALT. BID)
A5 SIDE ELEV. - PREP RM. ISLAND
¾"=1'-0"

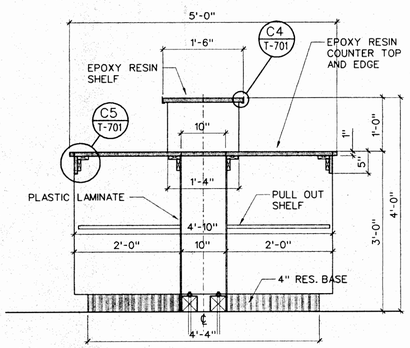

B1 SECTION – PREP RM. ISLAND

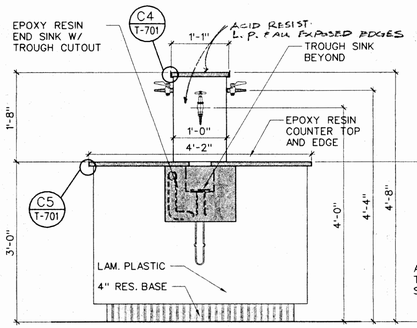

B2 SIDE ELEVATION–STUDENT ISLAND

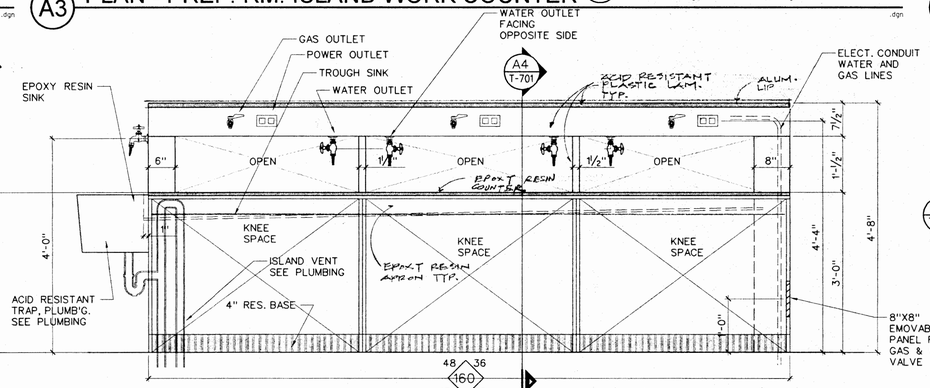

B3 ELEVATION - TYPICAL STUDENT ISLAND COUNTER

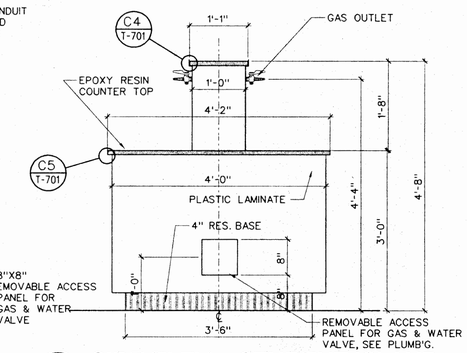

B5 SIDE ELEV. - STUDENT ISLAND
¾"=1'-0"

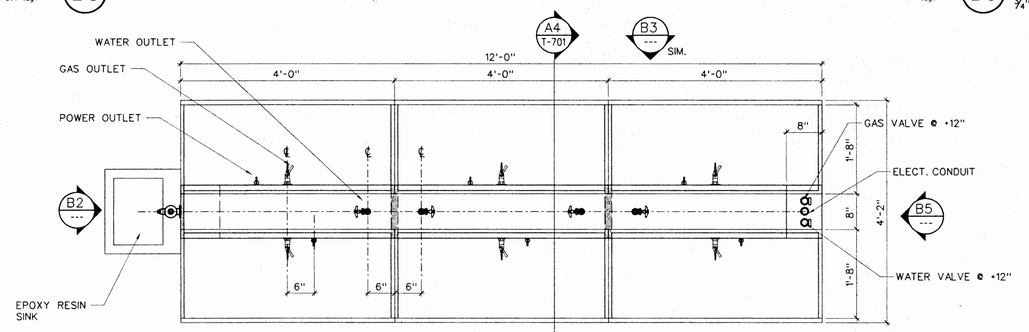

C3 PLAN - TYPICAL STUDENT ISLAND COUNTER
¾"=1'-0"

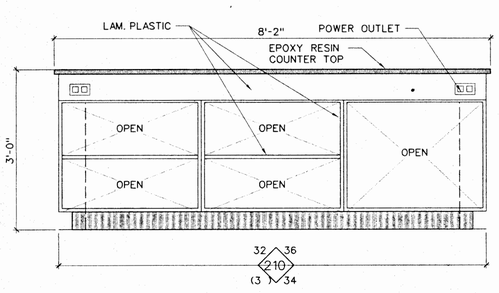

(ALT. BID)
D2 ELEVATION - DISECTION COUNTER

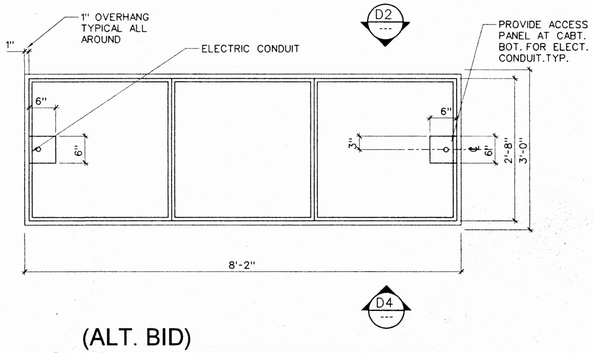

(ALT. BID)
D3 PLAN - DISECTION COUNTER

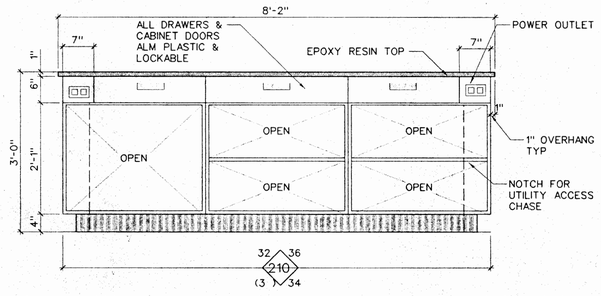

(ALT. BID)
D4 ELEVATION - DISECTION COUNTER
¾"=1'-0"

CASEWORK DETAILS

CARMICHAEL-KEMP ARCHITECTS AIA
2870 OSO FIELD ROAD, SUITE 200 SAN DIEGO, CA 92123 (619) 292-0326

LICENSED ARCHITECT ★ VINCENT J. SCHAEFFER ★ STATE OF CALIFORNIA

VERIFICATION STAMP DIV. OF THE STATE ARCHITECT OFFICE OF REGULATION SERVICES
APPL NO 4-101516
AC FLS SS
DATE DEC 1 1999

NEW SCIENCE BUILDING at MT. MIGUEL HIGH SCHOOL
1800 Sweetwater Road, Spring Valley, CA 91977
GROSSMONT UNION HIGH SCHOOL DISTRICT

JOB NO.	9822-1
DATE:	12-14-99
SHEET NUMBER	T-702
BINDING ORDER	46 of 82

g:\grossmont\9822-1\t-702.dgn Dec. 02, 1999 13:41:29

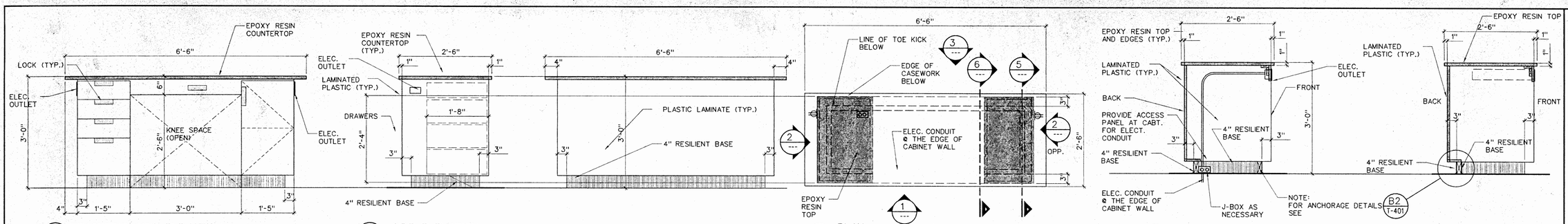

1 TEACHER'S SIDE ELEVATION

2 SIDE ELEVATION

3 CLASSROOM SIDE ELEVATION

4 PLAN

5 SECTION

6 SECTION

A1 TEACHER'S DEMONSTRATION TABLE – SCIENCE

3/4"=1'-0"

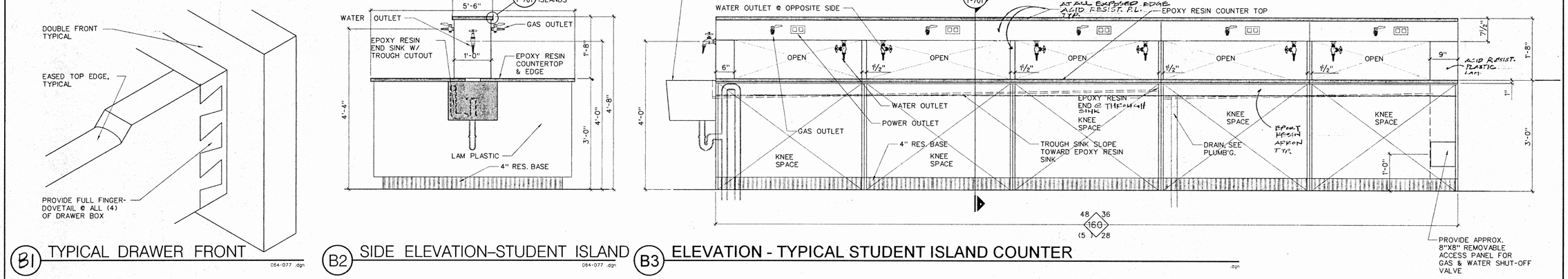

B1 TYPICAL DRAWER FRONT

064-077 .dgn

B2 SIDE ELEVATION–STUDENT ISLAND

064-077 .dgn

B3 ELEVATION - TYPICAL STUDENT ISLAND COUNTER

.dgn

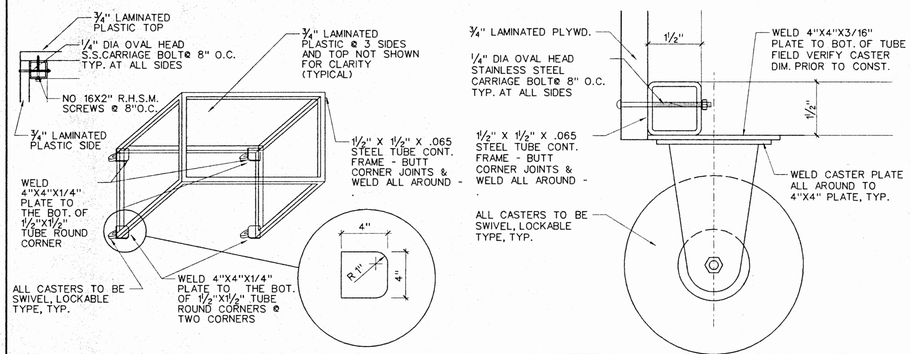

C1 1 1/2" STL. TUBE FRAME

1/2"=1'-0"

MMDET113.dgn

C2 CASTERS @ EACH CORNER

064-069 .dgn

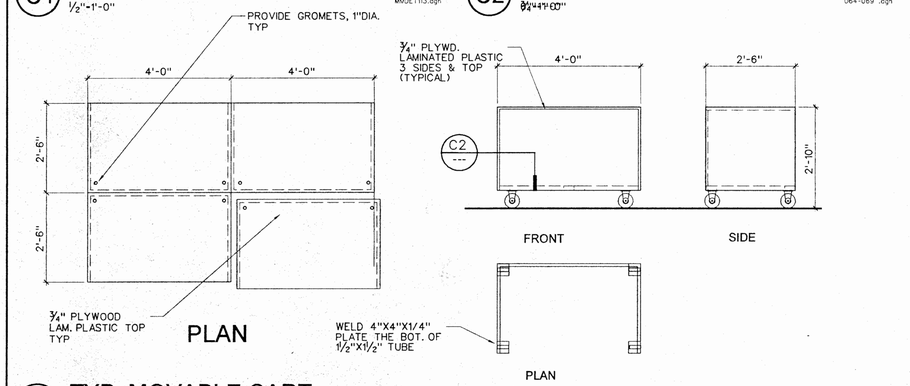

D1 TYP. MOVABLE CART

1/4"=1'-0"

064-079 .dgn

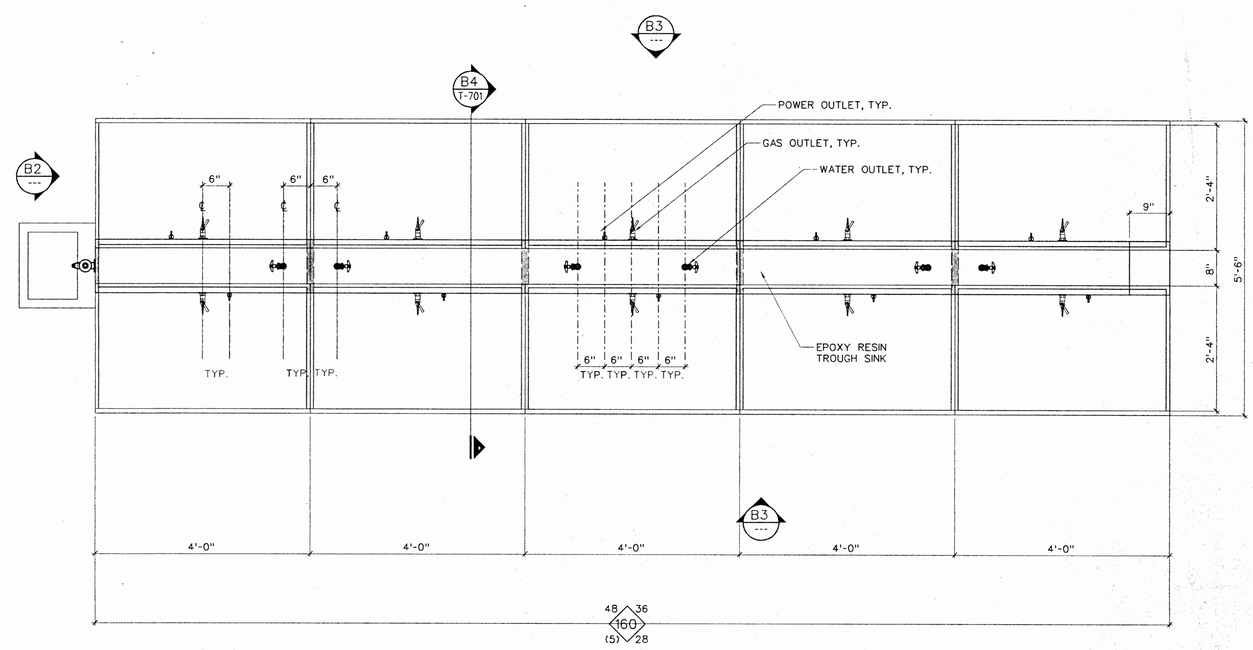

C3 PLAN - STUDENT ISLAND COUNTER @ CHEMISTRY RM 104

3/4"=1'-0"

CASEWORK DETAILS

NEW SCIENCE BUILDING at MT. MIGUEL HIGH SCHOOL
1800 Sweetwater Road, Spring Valley, CA 91977
GROSSMONT UNION HIGH SCHOOL DISTRICT

CARMICHAEL-KEMP ARCHITECTS AIA
2870 LOS FELTZ PLACE • LOS ANGELES • 90039 • 323.666.1265

LICENSED ARCHITECT LYNN A. SCHAEFFER C 20598 EXPIRES NOV. 30, 2000 STATE OF CALIFORNIA

IDENTIFICATION STAMP DIVISION OF ARCHITECT OFFICE OF REGULATION SERVICES
APPL NO 4-101516
AC. FLS SS
DATE DEC 14 1999

JOB NO.	9822-1
DATE:	12-14-99
SHEET NUMBER	T-703
BINDING ORDER	47 of 82

J:\Grossmont\9822-1\t-703.sht DEC. 02 1999 13:56:56

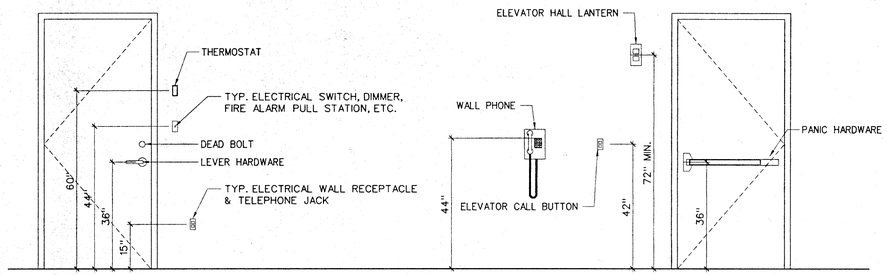

A1 MOUNTING HEIGHTS

½"=1'-0"

087-006 .dgn

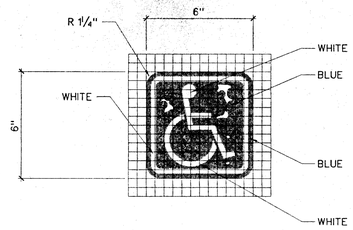

INTERNATIONAL SYMBOL OF ACCESSIBILITY
SILK SCREENED WHITE PICTOGRAPH ON ROYAL BLUE BACKGROUND MATCHING COLOR 15090 IN FED. STD. 599B. ON ¼" PLEXIGLASS INSTALLED @ PRIMARY ENTRANCE AS INDICTATED ON PLAN

A3 BUILDING ACCESSIBILITY SIGN

NO SCALE

104-005 .dgn

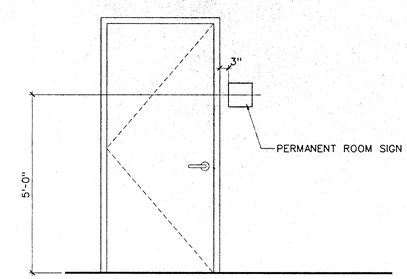

A4 DOOR GRAPHICS

NO SCALE

104-010A.dgn

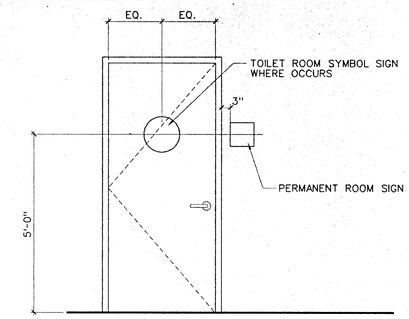

A5 DOOR GRAPHICS

NO SCALE

104-010 .dgn

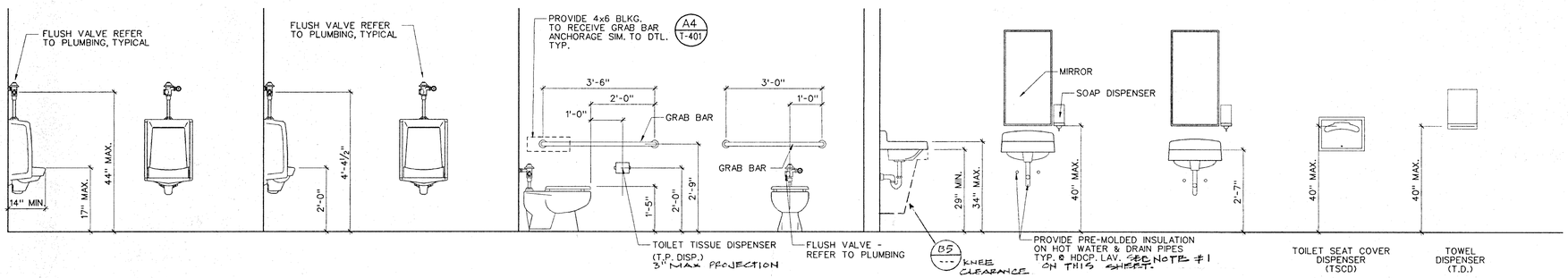

(A) URINAL (HDCP) (B) URINAL (NON-HANDICAP) (C) WATER CLOSET (HDCP) (D) LAVATORY (HDCP) (NON-HANDICAP) ACCESSORIES

B1 TOILET ROOM ACCESSORY MOUNTING HEIGHTS

NO SCALE

TMOUNT .dgn

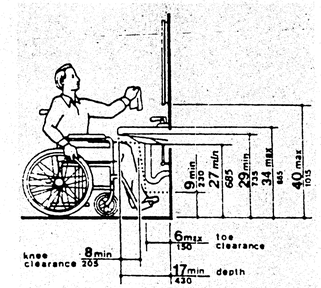

Fig. 31
Lavatory Clearances

B5 LAVATORY CLEARANCE

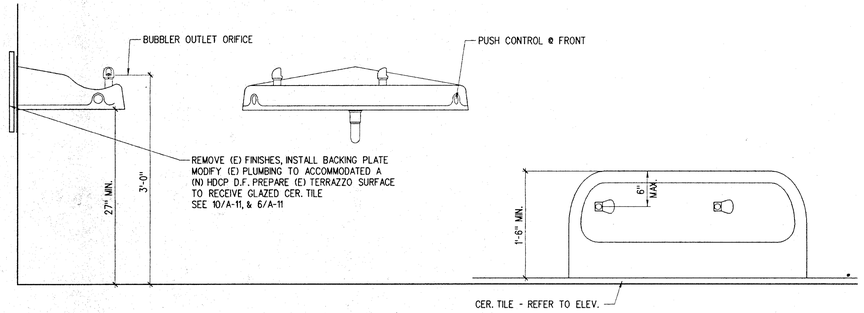

SIDE ELEVATION FRONT ELEVATION PLAN

C1 DRINKING FOUNTAIN

NO SCALE

CLDET235.dgn

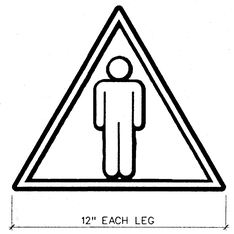

SIGN SHALL BE ¼" MATTE PLEXIGLASS W/ SILK-SCREENED WHITE PICTOGRAPH ON BLUE BACKGROUND

C3 MEN'S TOILET ROOM I.D. SIGN

NO SCALE

104-007 .dgn

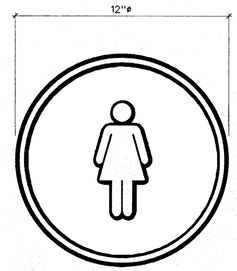

C4 WOMEN'S TOILET ROOM I.D. SIGN

NO SCALE

104-008 .dgn

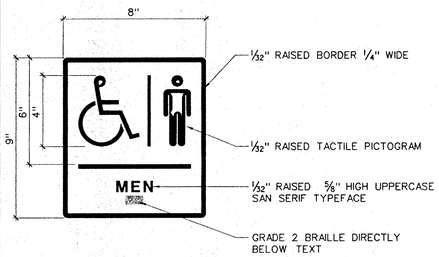

D1 MEN'S TOILET PERMANENT I.D. SIGN

NO SCALE

104-011 .dgn

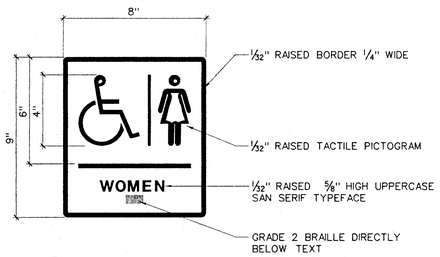

D2 WOMEN'S TOILET PERMANENT I.D. SIGN

NO SCALE

104-012 .dgn

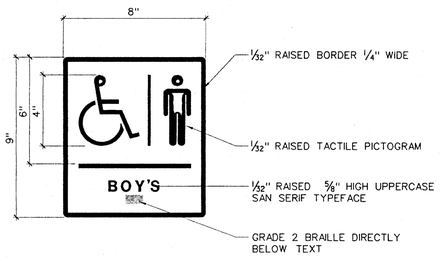

D3 BOY'S TOILET PERMANENT I.D. SIGN

NO SCALE

104-017 .dgn

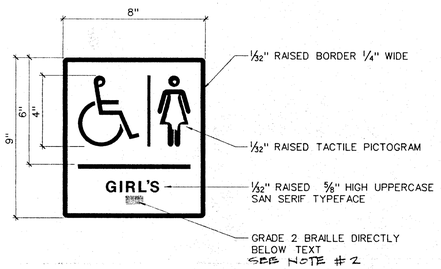

D4 GIRL'S TOILET PERMANENT I.D. SIGN

NO SCALE

104-018 .dgn

KEYED NOTES

1. MECHANISMS SHALL BE OPERABLE WITH ONE HAND AND SHALL NOT REQUIRE TIGHT GRASPING, PINCHING OR TWISTING OF THE WRIST. THE FORCE REQUIRED TO ACTIVATE CONTROLS SHALL BE NO MORE THAN 5 LBS. LEVER OPERATED, PUSH TYPE & ELECTRONICALLY CONTROLLED MECHANISMS ARE ACCEPTABLE. SELF CLOSING VALVES ARE ALLOWED IF THE FAUCET REMAINS OPEN FOR AT LEAST 10 SECONDS.

   HOT WATER & DRAIN PIPES ACCESSIBLE UNDER LAVATORIES SHALL BE INSULATED OR OTHERWISE COVERED. THERE SHALL BE NO SHARP OR ABRASIVE OBJECTS OR SURFACES UNDER LAVATORIES.

   AREA NOT HATCHED BELOW COUNTER MUST BE ACCESSIBLE AND CLEAR

2. Braille symbols. Contracted Grade 2 Braille shall be used wherever Braille symbols are specifically required in other portions of these standards. Dots shall be 1/10 inch (2.54mm) on centers in each cell with 2/10 inch (5.08mm) space between cells. Dots shall be raised a minimum of 1/40 inch (0.635mm) above background.

Graphic Requirements

CARMICHAEL-KEMP ARCHITECTS A.I.A.
2870 LOS FELIZ PLACE • LOS ANGELES • 90039 • (323) 666-1265

LICENSED ARCHITECT C-20592 REGISTERED PROFESSIONAL ENGINEER STATE OF CALIFORNIA

IDENTIFICATION STAMP DIV. OF ARCHITECT OFFICE OF REGULATION SERVICES
APPL NO 4-101516
AC FLS SS
DATE DEC 14 1999

NEW SCIENCE BUILDING at MT. MIGUEL HIGH SCHOOL
1800 Sweetwater Road, Spring Valley, CA 91977
GROSSMONT UNION HIGH SCHOOL DISTRICT

JOB NO.	9822-1
DATE:	12-14-99
SHEET NUMBER	T-801
BINDING ORDER	48 OF 82

g:\grossmont\9822-1\t-801.sht Dec 02, 1999 12:18:11

GENERAL

1. ALL WORKMANSHIP, MATERIAL, AND TESTING SHALL CONFORM TO THE REQUIREMENTS OF THE 1997 UNIFORM BUILDING CODE, AS AMENDED BY THE CALIFORNIA CODE OF REGULATIONS, TITLE 24, 1998 EDITION.
2. IT SHALL BE THE CONTRACTOR'S RESPONSIBILITY TO VERIFY ALL DIMENSIONS, TO VERIFY CONDITIONS AT THE JOB SITE AND TO CROSSCHECK DETAILS AND DIMENSIONS ON THE STRUCTURAL DRAWINGS WITH RELATED REQUIREMENTS ON THE ARCHITECTURAL, MECHANICAL, AND ELECTRICAL DRAWINGS BEFORE PROCEEDING WITH CONSTRUCTION.
3. ALL OMISSIONS OR CONFLICTS BETWEEN THE VARIOUS ELEMENTS OF THE WORKING DRAWINGS AND/OR SPECIFICATIONS SHALL BE BROUGHT TO THE ATTENTION OF THE ARCHITECT BEFORE PROCEEDING WITH CONSTRUCTION.
4. DETAILS MARKED TYPICAL SHALL APPLY IN ALL CASES, UNLESS SPECIFICALLY DETAILED OTHERWISE. WHERE NO DETAIL IS SHOWN, CONSTRUCTION SHALL BE AS SHOWN FOR OTHER SIMILAR WORK.
5. REFER TO SPECIFICATIONS FOR ADDITIONAL INFORMATION.
6. THE DRAWINGS AND SPECIFICATIONS REPRESENT THE FINISHED STRUCTURE. THE CONTRACTOR SHALL SUPERVISE AND DIRECT THE WORK, AND SHALL BE SOLELY RESPONSIBLE FOR CONSTRUCTION MEANS, METHODS, TECHNIQUES, SEQUENCES AND PROCEDURES, INCLUDING BRACING, SHORING, AND LAYDOWN OF CONSTRUCTION MATERIALS, ETC. UNLESS SPECIFICALLY INDICATED OTHERWISE, THE DESIGN AND INSTALLATION OF TEMPORARY SHORING AND BRACING SHALL BE THE RESPONSIBILITY OF THE CONTRACTOR.
7. UNLESS OTHERWISE STATED IN WRITING, SITE VISITS BY REPRESENTATIVES OF THE STRUCTURAL ENGINEER:
   A. DO NOT INCLUDE INSPECTION OF PROTECTIVE OR TEMPORARY CONSTRUCTION
   B. ARE GENERAL IN NATURE AND ARE NOT CONTINUOUS OR DETAILED
   C. DO NOT GUARANTEE CONTRACTOR'S PERFORMANCE
   D. SHALL NOT BE CONSTRUED AS SUPERVISION OF CONSTRUCTION.
8. DIMENSIONS SHALL GOVERN OVER SCALES SHOWN ON DRAWINGS.

FOUNDATIONS

1. ALL FOUNDATION AND SOIL WORK SHALL CONFORM TO THE SPECIFICATIONS.
2. FOOTINGS SHALL BE ESTABLISHED ON PROPERLY COMPACTED ENGINEERED FILL.
3. ALL FOUNDATION BEARING AND FILL MATERIALS SHALL BE INSPECTED AND APPROVED BY THE D.S.A. INSPECTOR AND CONTINUOUSLY INSPECTED BY THE SOIL ENGINEER PRIOR TO PLACING CONCRETE.
4. SOIL TYPE: ENGINEERED FILL
5. ALLOWABLE SOIL BEARING PRESSURE:
   2000 PSF FOR DEAD PLUS LIVE LOADS AT 2'-0" MINIMUM DEPTH BELOW LOWEST ADJACENT GRADE.

CONCRETE

1. CONCRETE SHALL HAVE A MINIMUM ULTIMATE COMPRESSIVE STRENGTH f'c= 3,000 PSI AT 28 DAYS, UNLESS NOTED OTHERWISE.
2. ALL CONCRETE SHALL BE ROCK CONCRETE CONFORMING TO ASTM C-33.
3. CEMENT SHALL BE PORTLAND CEMENT TYPE II CONFORMING TO ASTM C-150 AND SHALL BE TESTED.
4. MAXIMUM CONCRETE SLUMPS:
   A) FOOTINGS = 4"
   B) SLABS ON GRADE = 4"
   C) ALL OTHER CONCRETE = 4"
5. ALL REINFORCING BARS, DOWELS, ANCHOR BOLTS AND OTHER INSERTS SHALL BE SECURED IN POSITION PRIOR TO PLACING OF CONCRETE.
6. NO PIPES OR DUCTS SHALL BE PLACED IN STRUCTURAL CONCRETE UNLESS SPECIFICALLY DETAILED. SEE MECHANICAL AND/OR ELECTRICAL DRAWINGS FOR LOCATION OF SLEEVES THROUGH WALLS AND FLOORS.
7. REFER TO ARCHITECTURAL DRAWINGS FOR ALL MOULDS, GROOVES, CLIPS, ORNAMENTS, GROUNDS AND OTHER INSERTS TO BE CAST IN CONCRETE.
8. CONTINUOUS INSPECTION BY THE PROJECT INSPECTOR IS REQUIRED DURING PLACING OF CONCRETE.
9. THE USE OF POWER DRIVEN CONCRETE FASTENERS (SHOT PINS) FOR TENSION LOADS IS LIMITED TO MINOR LOADS, NOT EXCEEDING 100 LBS. THE OPERATOR, TOOL AND FASTENER SHALL BE PREQUALIFIED BY THE PROJECT INSPECTOR.THE INSPECTOR SHALL OBSERVE THE TESTING OF THE FIRST 10 FASTENERS. 10% OF THE REMAINING PINS SHALL BE RANDOMLY TESTED.A TEST SHALL LOAD THE PIN IN TENSION TO 200 LBS IN SUCH A MANNER NOT TO RESIST THE SPALLING TENDENCY OF THE CONCRETE SURROUNDING THE PIN. SHOULD FAILURE OCCUR ON ANY PIN TESTED, ALL PINS MUST BE TESTED AND REJECTED PINS REPLACED.

REINFORCING STEEL

1. ALL REINFORCING SHALL BE PLACED AND SUPPORTED IN CONFORMANCE WITH "THE MANUAL OF STANDARD PRACTICE FOR REINFORCED CONCRETE CONSTRUCTION" LATEST EDITION, PUBLISHED BY C.R.S.I.
2. ALL REINFORCING STEEL SHALL BE DEFORMED BARS CONFORMING TO ASTM A-615 GRADE 60, EXCEPT #4 AND SMALLER BARS MAY BE GRADE 40, UNLESS NOTED OTHERWISE.
3. TIE WIRE SHALL BE 16 GAGE, SEE SPECIFICATION.
4. ALL REINFORCING STEEL SHALL HAVE THE FOLLOWING MINIMUM CONCRETE COVERAGE, UNLESS NOTED OTHERWISE:
   A) CONCRETE PLACED AGAINST EARTH = 3"
   B) CONCRETE WITH FORMED SURFACES IN CONTACT WITH EARTH = 2"
   C) CONCRETE EXPOSED TO WEATHER = 2"
5. CONTINUOUS REINFORCING STEEL MUST BE SPLICED WITH A MINIMUM LAP OF 40 BAR DIAMETERS IN CONCRETE OR 48 BAR DIAMETERS IN MASONRY BUT NOT LESS THAN 24 INCHES UNLESS NOTED OTHERWISE. LAP 3'-0"MIN. FOR #7 BARS AND 4'-0"MIN. FOR #8 BARS.
6. STAGGER REBAR SPLICES A MINIMUM OF TWICE THE LAP LENGTH FOR HORIZONTAL REINFORCING.
7. DOWELS SHALL BE PROVIDED AT ALL POUR JOINTS AND SHALL BE THE SAME SIZE AND SPACING AS REINFORCING DIRECTLY BEYOND POUR JOINTS.

WOOD

1. LUMBER SHALL BE DOUGLAS FIR-LARCH GRADED IN ACCORDANCE WITH THE LATEST WEST COAST LUMBERMANS INSPECTION BOARD GRADING RULES. ALL LUMBER SHALL BE S4S AND GRADE STAMPED AS FOLLOWS, UNLESS NOTED OTHERWISE:
   A) JOISTS, BEAMS, POSTS, ETC.: NO.1
   B) PLATES, BLOCKING, STUDS: NO.1
2. ALL PLYWOOD DESIGNATED ON THE STRUCTURAL DRAWINGS SHALL BE DOUGLAS FIR, CONFORMING TO THE LATEST NATIONAL BUREAU OF STANDARDS "U.S. PRODUCT STANDARD PS-1". PLYWOOD SHALL BE 5-LAYER, 5-PLY, GRADE STAMPED "STRUCTURAL 1-CD" WITH EXTERIOR GLUE AND PANEL INDEX 32/16 FOR 1/2" PLYWOOD AND 48/24 FOR 3/4" PLYWOOD, UNLESS NOTED OTHERWISE.
3. ALL WOOD CONNECTORS SHALL BE MANUFACTURED BY SIMPSON STRONG-TIE COMPANY. UNLESS OTHERWISE SHOWN, ALL NAIL HOLES IN WOOD CONNECTORS SHALL BE FILLED WITH A NAIL OF THE LARGEST SIZE RECOMMENDED BY THE MANUFACTURER.
4. ALL WOOD IN CONTACT WITH CONCRETE OR MASONRY AND WITHIN 4'-0" OF GRADE SHALL BE PRESSURE TREATED.
5. NO WOOD MEMBER SHALL BE CUT, NOTCHED OR BORED, EXCEPT AS DETAILED. PLATES HAVING HOLES OR NOTCHES LARGER THAN 1 1/4" SHALL BE REINFORCED ON EACH SIDE WITH A 1 1/2" x 1/4" STEEL STRAP NAILED WITH 4-16d NAILS EACH SIDE OF HOLE OR NOTCH. DOUBLE TOP PLATES IN SHEAR WALLS SHALL NOT HAVE HOLES OR NOTCHES LARGER THAN 1 1/4" AND SHALL BE LOCATED ON CENTERLINE PLATE.
6. BOLT HOLES IN WOOD SHALL BE 1/32" TO 1/16" LARGER THAN THE BOLT. USE WASHERS UNDER HEAD AND NUT OF BOLTS. RETIGHTEN BOLTS BEFORE CLOSING IN.
7. LAG SCREWS SHALL BE SCREWED INTO PLACE (NOT DRIVEN). LEAD HOLES SHALL BE PREBORED AS FOLLOWS:
   A) THE LEAD HOLE FOR THE SHANK SHALL HAVE THE SAME DIAMETER AS THE SHANK AND THE SAME DEPTH AS THE LENGTH OF THE UNTHREADED SHANK.
   B) THE LEAD HOLE FOR THE THREADED PORTION SHALL HAVE A DIAMETER EQUAL TO 60% TO 75% OF THE SHANK DIAMETER AND A LENGTH EQUAL TO AT LEAST THE LENGTH OF THE THREADED PORTION. THE LARGER FIGURE IN EACH RANGE SHALL APPLY TO LAG SCREWS OF GREATER DIAMETERS.
8. ALL NAILS SHALL BE COMMON WIRE NAILS. SPECIAL NAILS OF THE SAME DIAMETER AND PENETRATING INTO THE SUPPORT 1/2 OF THE LENGTH OF THE NAIL CALLED FOR MAY BE USED FOR "SIMPSON" METAL ACCESSORIES. WHERE NOT INDICATED, NAILING SHALL MEET THE MINIMUM NAILING REQUIREMENTS IN THE "TYPICAL NAILING SCHEDULE." WHERE NAILS CANNOT BE DRIVEN WITHOUT DANGER OF SPLITTING, SUB-DRILL NAIL HOLES HAVING A DIAMETER EQUAL TO 50% TO 75% OF THE NAIL DIAMETER.PLYWOOD EDGE NAILS SHALL HAVE A 3/8" MINIMUM EDGE DISTANCE. PLYWOOD NAILS SHALL BE NAILED SO THAT THE NAIL HEADS ARE FLUSH WITH THE FACE OF PLYWOOD; SINKING NAIL HEADS IS PROHIBITED.
10. EDGES OF ALL OPENINGS THROUGH THE ROOF SHALL RECEIVE BOUNDARY NAILING PER ROOF PLYWOOD NAILING REQUIREMENTS.
11. ALL TOPS OF COLUMNS AND WALLS SHALL BE ADEQUATELY BRACED UNTIL THE ROOF SHEATHING IS COMPLETELY NAILED IN PLACE.
12. SOLID BLOCKING SHALL BE PLACED BETWEEN JOISTS AT ALL POINTS OF SUPPORT AND ALL POINTS WHERE SHEATHING IS DISCONTINUOUS.
13. EXCEPT AS OTHERWISE DETAILED OR NOTED ON THE ARCHITECTURAL OR STRUCTURAL DRAWINGS, PARTITIONS SHALL BE 2x6 STUDS @ 16" O.C. WITH SILL AND PLATES AS SHOWN IN THE APPLICABLE DETAILS.
14. MACHINE APPLIED NAILING: USE OF MACHINE NAILING IS SUBJECT TO A SATISFACTORY JOBSITE DEMONSTRATION FOR EACH PROJECT AND THE REVIEW BY THE PROJECT ARCHITECT OR STRUCTURAL ENGINEER AND THE OFFICE OF STATE ARCHITECT. THE USE OF MACHINE NAILING IS SUBJECT TO CONTINUED SATISFACTORY PERFORMANCE. IF NAILHEADS PENETRATE THE OUTER PLY MORE THAN WOULD BE NORMAL FOR A HAND HAMMER OR IF MINIMUM ALLOWABLE EDGE DISTANCES ARE NOT MAINTAINED, THE PERFORMANCE WILL BE DEEMED UNSATISFACTORY.
15. FOR CONNECTIONS OF HANGERS OR BRACES FOR MECHANICAL, ELECTRICAL OR PLUMBING ITEMS TO TRUSS JOISTS, SEE DETAIL 14/S4.

TYPICAL NAILING SCHEDULE

JOIST OR RAFTERS TO SIDES OF STUDS: =	
8" JOIST OR LESS	3-16d
FOR EACH ADDITIONAL 4" IN DEPTH OF JOIST	1-16d
JOISTS OR RAFTERS AT ALL BEARINGS, TOE NAIL, EACH SIDE	2-16d
CEILING JOISTS, LAPS OVER PARTITIONS, FACE NAIL	3-16d
CEILING JOISTS TO PARALLEL RAFTERS, FACE NAIL	3-16d
BLOCKING BETWEEN JOIST OR RAFTERS:	
TO JOIST OR RAFTERS, TOE NAILS, EA. SIDE, EA. END	2-10d
TO JOISTS OR RAFTER BEARINGS, TOE NAILS, EACH SIDE	2-10d
BLOCKING BETWEEN STUDS, EACH END	2-10d TOENAIL OR 2-16d
BRIDGING TO JOIST, TOE NAIL, EACH END	2-8d
SOLE PLATE TO JOIST OR BLOCKING, FACE NAIL 16d @ 16" o.c.	
TOP PLATE TO STUD END NAIL	2-16d
STUD TO SOLE PLATE, TOE NAIL	4-8d
DOUBLED STUDS, FACE NAIL 16d @ 24" o.c.	
TOP PLATES, LAPS AND INTERSECTIONS, FACE NAIL	2-16d
DOUBLE TOP PLATES, FACE NAIL 16d @ 16" o.c.	
BUILT-UP CORNER STUDS 16d @ 24" o.c.	
RIBBONS TO STUDS:	
1" RIBBONS	2-8d
2" RIBBONS	2-16d
CONTINUOUS HEADER, TWO PIECES ALONG EACH EDGE 16d @ 16" o.c.	
CONTINUOUS HEADER TO STUD, TOE NAIL	4-8d

ADHESIVE AND GROUT

1. DRYPACK MIX SHALL BE ONE PART PORTLAND CEMENT AND 1-1/2 PARTS FINE AGGREGATE WITH A MINIMUM OF WATER.
2. SIKA GROUT 212 NON-SHRINK CEMENTITIOUS GROUT SHALL BE USED WHERE "GROUT" IS SPECIFIED ON DRAWINGS.
3. CONTINUOUS INSPECTION BY A REGISTERED DEPUTY INSPECTOR IS REQUIRED FOR ALL GROUTING PROCEDURES.
4. HILTI HIT HY-150 ADHESIVE ANCHOR SYSTEM SHALL BE USED WHERE "ADHESIVE" IS SPECIFIED IN CONCRETE. THE HIT HY-150 ADHESIVE ANCHORS SHALL BE INSTALLED IN ACCORDANCE WITH ICBO RESEARCH REPORT 5193.
5. CONTINUOUS INSPECTION BY A REGISTERED DEPUTY INSPECTOR IS REQUIRED FOR ALL ADHESIVE ANCHOR INSTALLATIONS.

STRUCTURAL STEEL

1. STRUCTURAL AND MISCELLANEOUS STEEL SHALL CONFORM WITH ASTM A-36, AND SHALL BE FABRICATED IN ACCORDANCE WITH THE LATEST A.I.S.C. "SPECIFICATION FOR STRUCTURAL STEEL BUILDINGS".
2. TUBES SHALL CONFORM TO ASTM A-500, GRADE B (Fy=46 KSI).
3. BOLTS SHALL CONFORM TO ASTM A-307 UNLESS NOTED OTHERWISE.
4. SHOP DRAWINGS FOR STRUCTURAL AND MISCELLANEOUS STEEL SHALL BE SUBMITTED FOR REVIEW PRIOR TO FABRICATION.
5. ALL WELDING SHALL CONFORM TO A.W.S. A5.1 AND A.W.S. D1.1 OF THE STRUCTURAL WELDING CODE.
6. ALL WELDING SHALL BE DONE BY OPERATORS QUALIFIED BY AN INSPECTOR APPROVED BY D.S.A. FOR THE TYPE OF OPERATION INVOLVED.
7. E-70XX ELECTRODES SHALL BE USED.
8. SPECIAL INSPECTION IS REQUIRED FOR ALL SHOP AND FIELD WELDING BY AN AWS LICENSED WELDING INSPECTOR APPROVED BY THE D.S.A.
9. STRUCTURAL STEEL ADJACENT TO SOIL SHALL HAVE 4" MINIMUM CONCRETE COVERAGE.
10. ALL COMPLETE PENETRATION GROOVE WELDS AND PARTIAL PENETRATION GROOVE WELDS THICKER THAN 1/4" SHALL BE TESTED BY ULTRASONIC TESTING.
11. ALL EXPOSED STEEL MEMBERS AND CONNECTIONS SHALL BE GALVANIZED.
12. AUTOMATIC END WELDED STUDS SHALL BE NELSON GRANULAR FLUXFILLED SHEAR CONNECTOR OR ANCHOR STUDS (OR APPROVED EQUAL). STUDS SHALL BE MANUFACTURED OF C-1015 COLD ROLLED STEEL WHICH CONFORMS TO A.S.T.M. SPECIFICATION A-108-58-T.
13. SEE ARCH, MECH AND ELEC DRAWINGS FOR HOLES THROUGH WIDE FLANGE BEAM WEBS. HOLES SHALL BE 2"DIA. MAX. SPACED 4'-0"MIN. APART AND LOCATED AT MID DEPTH OF THE BEAM. HOLES ARE NOT ALLOWED WITHIN 4'-0" OF BEAM SUPPORTS.

PREFABRICATED JOISTS

1. "TRUS JOISTS" SHALL BE DESIGNED, DETAILED AND MANUFACTURED BY "TRUS JOIST MACMILLAN CORPORATION". SEE DETAIL 13/S4
2. "TJI" JOISTS SHALL BE MANUFACTURED AND INSTALLED IN ACCORDANCE WITH NATIONAL EVALUATION REPORT #NER-200.
3. SHOP DRAWINGS AND CALCULATIONS SHALL BE SUBMITTED FOR ENGINEER'S REVIEW, AND DSA APPROVAL PRIOR TO FABRICATION. SHOP DRAWINGS AND CALCULATIONS SHALL INCLUDE HOLES THRU JOIST WEBS PER ARCH., MECH. AND ELEC. DRAWINGS.

PARALLEL STRAND LUMBER (PSL)

1. "PARALAM" SHALL BE DESIGNED, DETAILED AND MANUFACTURED BY "TRUS JOIST MACMILLAN CORPORATION".
2. STRESS REQUIREMENTS SHALL BE AS FOLLOWS

   Fb = 2900 PSI (MIN.)
   Fv = 290 PSI (MIN.)
   Fc = 750 PSI (MIN.) PERPENDICULAR TO GRAIN)
   E = 2,000,000 PSI (MIN.)

TIMBERSTRAND LSL

1. "TIMBERSTRAND LSL" SHALL BE DESIGNED, DETAILED AND MANUFACTURED BY "TRUS JOIST MACMILLAN CORPORATION".
2. TIMBERSTRAND LSL SHALL ONLY BE USED FOR RIM JOIST AND BLOCKING.
3. STRESS REQUIREMENTS SHALL BE AS FOLLOWS

   Fb = 2250 PSI (MIN.)
   Fv = 400 PSI (MIN.)
   Fc = 350 PSI (MIN.) PERPENDICULAR TO GRAIN)
   E = 1,500,000 PSI (MIN.)

MASONRY

1. REINFORCED MASONRY SHALL CONSIST OF MATERIALS AND CONSTRUCTION AS DEFINED IN THE 1998 CALIFORNIA BUILDING CODE.
2. BLOCK SHALL BE MEDIUMWEIGHT UNITS CONFORMING TO UBC STANDARD 21-4, GRADE N-1.
3. ALL MASONRY SHALL HAVE A RUNNING BOND PATTERN.
4. OPEN END BLOCKS ARE REQUIRED THROUGHOUT.
5. AGGREGATE SHALL CONFORM TO ASTM C144 FOR MORTAR AND ASTM C404 FOR GROUT.
6. MORTAR PROPORTIONS SHALL BE IN ACCORDANCE WITH SECTION 2103.8.2 OF THE CBC AND ACHIEVE A COMPRESSIVE STRENGTH OF 2,000 PSI.
7. FINE GROUT AND COARSE GROUT PROPORTIONS SHALL BE IN ACCORDANCE WITH SECTION 2103.4.2 OF THE CBC AND ACHIEVE A COMPRESSIVE STRENGRTH OF 2,000 PSI. USE SIKA CHEMICAL CORPORATION "GROUT AID".
8. GROUTING METHOD SHALL BE IN ACCORDANCE WITH THE CALIFORNIA CODE OF REGULATIONS AND AS FOLLOWS:
   A. ALL BLOCK WALLS SHALL BE CONSTRUCTED USING THE "LOW-LIFT" METHOD (2'-0" MAXIMUM LIFTS)
9. PROVIDE MECHANICAL VIBRATION FOR ALL GROUT.
10. CONTINUOUS INSPECTION BY A MASONRY INSPECTOR APPROVED BY D.S.A. IS REQUIRED.
11. USE FULL HEIGHT VERTICAL REINFORCING BARS WITHOUT SPLICES, UNLESS NOTED OTHERWISE. BRACE BARS PER CBC REQUIREMENTS BEFORE GROUTING.
12. ALL BOLTS WHICH ARE EMBEDDED IN MASONRY SHALL BE GROUTED IN PLACE WITH NOT LESS THAN 1" OF GROUT BETWEEN THE BOLT AND THE MASONRY UNIT.

CONCRETE/GROUT MIX DESIGN SUBMITTALS

1. MIX DESIGNS SHALL BE SUBMITTED TO THE ARCHITECT TWO WEEKS PRIOR TO ANY POUR FOR THE DESIGN.
2. ALL MIX DESIGNS SHALL BE SIGNED BY A CALIFORNIA REGISTERED CIVIL ENGINEER.
3. SEE SPECIFICATIONS AND GENERAL NOTES FOR MIX REQUIREMENTS.
4. MIX DESIGNS SHALL INCLUDE, BUT NOT BE LIMITED TO THE FOLLOWING:
   A) PROJECT NAME
   B) MIX DESIGN NUMBER
   C) LOCATION WHERE EACH DESIGN IS TO BE USED
   D) STRENGTH
   E) MAXIMUM SLUMP
   F) CEMENT TYPE
   G) AGGREGATE GRADATION
   H) MAXIMUM SIZE OF COARSE AGGREGATE
   I) MATERIAL PROPORTIONS
   J) ADMIXTURES
5. SUBMIT MANUFACTURER'S INFORMATION FOR ALL ADMIXTURES.

TESTING DRILLED IN ANCHORS

1. ALL DRILLED-IN EXPANSION OR ADHESIVE ANCHORS SHALL BE TESTED PER DSA IR 19-1 AND AS FOLLOWS:
   A. SILL PLATES = 10%
   B. STRUCTURAL USES, HOLDOWNS, ETC. = 100%
   C. NON-STRUCTURAL USES, EQUIPMENT ANCHORAGE = 50%

   TESTING SHALL CONSIST OF A TENSION OR TORQUE TEST.

   TESTING SHALL BE DONE BY THE TESTING LAB IN THE PRESENCE OF THE PROJECT INSPECTOR.
2. THE FOLLOWING VALUES SHALL BE USED FOR TESTING WEDGE ANCHORS IN HARDROCK OR LIGHTWEIGHT CONCRETE:

ANCHOR DIA. (in)	TENSION (lbs)	TORQUE (ft-lbs)
3/8	1100	25
1/2	2000	50
5/8	2300	80
3/4	3700	150
1	5800	250

3. ADHESIVE ANCHORS SHALL BE TESTED FOR 200% OF THE ICBO DESIGN TENSION VALUE BASED ON THE ANCHOR EMBEDMENT DEPTH.
4. APPLY PROOF TEST LOADS TO WEDGE ANCHORS WITHOUT REMOVING THE NUT, IF POSSIBLE. IF NOT, REMOVE NUT AND INSTALL A THREADED COUPLER TO THE SAME TIGHTNESS OF THE ORIGINAL NUT USING A TORQUE WRENCH AND APPLY LOAD.
5. REACTION LOADS FROM TEST FIXTURES MAY BE APPLIED CLOSE TO THEANCHOR BEING TESTED, PROVIDED THE ANCHOR IS NOT RESTRAINED FROM WITHDRAWING BY THE FIXTURE.
6. TEST EQUIPMENT IS TO BE CALIBRATED BY AN APPROVED TESTING LABORATORY IN ACCORDANCE WITH STANDARD RECOGNIZED PROCEDURES.
7. THE FOLLOWING CRITERIA APPLY FOR THE ACCEPTANCE OF INSTALLED ANCHOR:
   A) HYDRAULIC RAM METHOD: THE ANCHOR SHOULD HAVE NO OBSERVABLE MOVEMENT AT THE APPLICABLE TEST LOAD. A PRACTICAL WAY TO DETERMINE OBSERVABLE MOVEMENT IS THAT THE WASHER UNDER THE NUT BECOMES LOOSE.
   B) TORQUE WRENCH METHOD: THE APPLICABLE TEST TORQUE MUST BE REACHED WITHIN ONE-HALF (1/2) TURN OF THE NUT TYPICAL, AND ONE-QUARTER (1/4) TURN OF THE NUT FOR 5/8 INCH SLEEVE ANCHORS ONLY.
8. TESTING SHOULD OCCUR 24 HOURS MINIMUM AFTER INSTALLATION OF THE SUBJECT ANCHORS.

METAL DECKING

1. ALL LIGHT GAGE STEEL DECKING, CLOSURES, FLASHING, ETC., SHALL CONFORM TO ASTM A-446 GRADE A AND SHALL BE GALVANIZED CONFORMING TO ASTM A-525 COATING DESIGNATION G-60, UNLESS NOTED OTHERWISE.
2. DECKING SHALL BE ATTACHED TO STEEL FRAMING WITH #12 HEX WASHER HEAD SCREWS w/ NEOPRENE WASHERS @ 6"o.c. U.N.O.

GENERAL NOTES

GROSSMAN & SPEER ASSOCIATES, INC.
STRUCTURAL ENGINEERS #99027
529 SIXTH AVENUE, SUITE #206
GLENDALE, CALIFORNIA 91203
(818) 507-1520
FAX (818) 507-1556
REGISTERED PROFESSIONAL ENGINEER ★ NO. 2369 Exp. 3-31-02 ★ STATE OF CALIFORNIA

CARMICHAEL-KEMP ARCHITECTS
2801 LOS FELIZ BLVD. ● LOS ANGELES ● 90039 ● (323) 663-7185
REGISTERED PROFESSIONAL ENGINEER ★ TAMARA J. SCHAEFFER ★ C 20592 ★ EXPIRES NOV 30 '99 ★ STATE OF CALIFORNIA

IDENTIFICATION STAMP
DIV. OF THE STATE ARCHITECT
OFFICE of REGULATION SERVICES
APPL. NO. 4-101516
AC FLS SS
DATE DEC 1 1999

NEW SCIENCE BUILDING at MT. MIGUEL HIGH SCHOOL
1800 Sweetwater Road, Spring Valley, CA 91977
GROSSMONT UNION HIGH SCHOOL DISTRICT

JOB NO. 9822-1
DATE 12-14-99
SHEET NUMBER
S-1
BINDING ORDER 49 of 82

DRAWING NAME: 9822-1S1.DWG

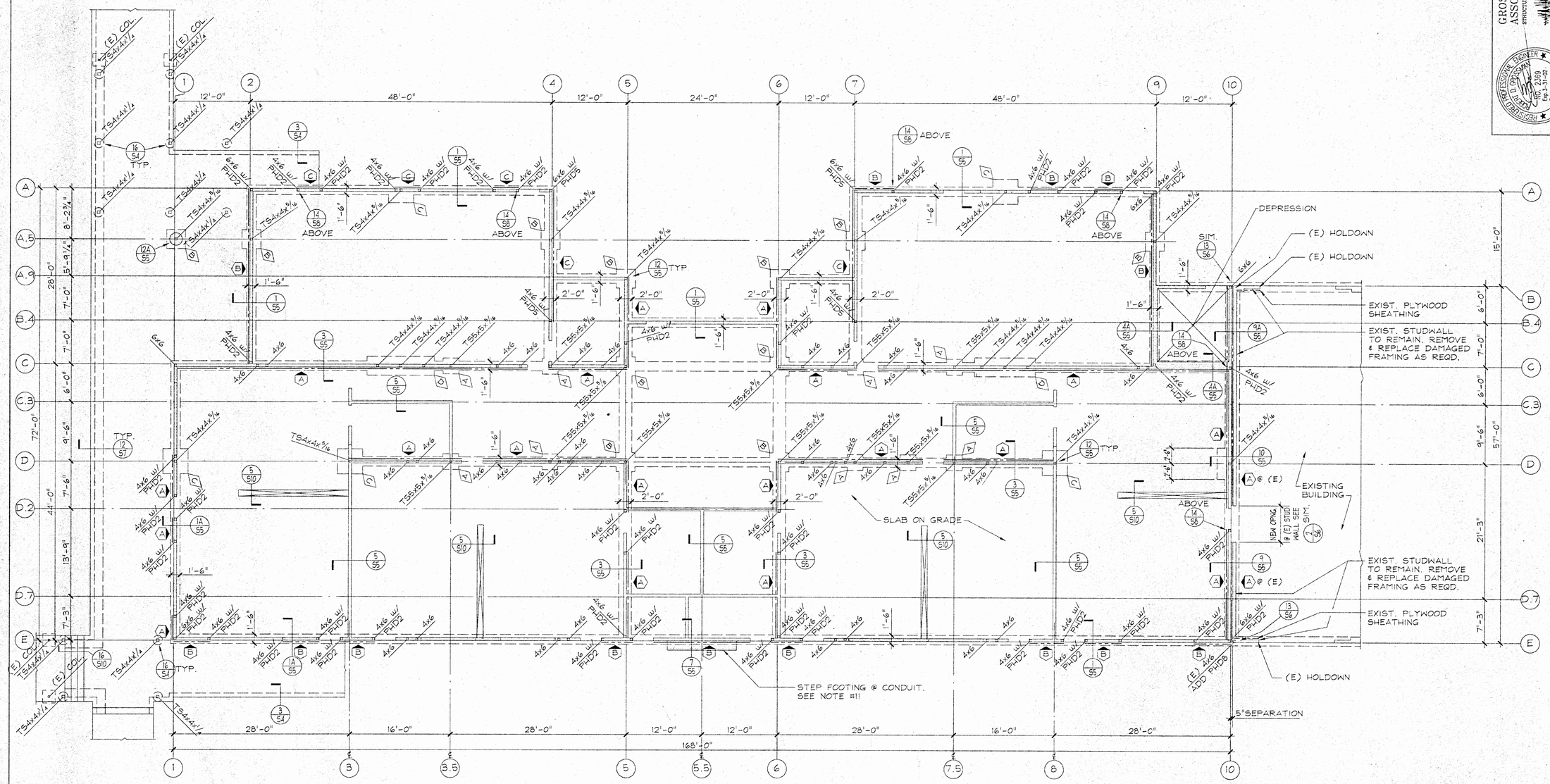

NOTES:

1. SLAB ON GRADE SHALL BE 4" THICK CONCRETE REINFORCED WITH #4 @ 18"o.c. EACH WAY @ CENTER LINE OVER 10 MIL PLASTIC MEMBRANE OVER SUBGRADE PREPARED PER SPECIFICATIONS.
2. ◇ INDICATES COLUMN FOOTING TYPE, SEE (12/S6).
3. PHD INDICATES 4x6 WITH SIMPSON HOLDOWN ANCHOR TYP. U.N.O. SEE (1/S6).
4. ⬡ INDICATES SHEAR WALL TYPE, SEE (1/S6).
5. ALL BEARING AND SHEAR WALLS SHALL BE 2x6 @ 16"o.c. TYP. U.N.O.
6. ALL WOOD POSTS AND STEEL COLUMNS ARE AT CENTER LINE OF WALL TYPICAL U.N.O.
7. SEE TYPICAL DETAILS AND ARCHITECTURAL DRAWINGS FOR INFORMATION NOT SHOWN INCLUDING BUT NOT LIMITED TO, SLAB DEPRESSIONS, SLAB DETAILS, SITE WORK, ETC.
8. ═══ INDICATES 6" CONCRETE CURB, FOOTING AND CURB ARE MONOLITHIC POUR, TYPICAL U.N.O.
9. ALL EXTERIOR WALLS SHALL HAVE 1/2" PLYWOOD.
10. ALL DIMENSIONS SHOWN ARE TO FACE OF STUD AND CENTER LINE OF COLUMN, TYP. U.N.O.
11. SEE (8/S4) FOR TYPICAL STEPPED FOOTING CONDITION. CONTRACTOR SHALL COORDINATE LOCATION OF STEPS AND FOOTING ELEVATIONS WHERE PIPE OR CONDUIT OCCURS TO CONFORM TO (5/S4) AND (6/S4).
12. FOR TYPICAL WOOD POST IN STUD WALL, SEE (8/S6).
13. FOR ATTACHEMENT OF NAILERS TO STEEL TUBE COLUMNS SEE (8/S6)
14. (E) INDICATES EXSISTING.

GENERAL NOTE:

FRAMING PLANS AND STRUCTURAL DRAWINGS INDICATE LOCATION AND EXTENT OF PLYWOOD SHEAR PANELS AND STRUCTURAL PLYWOOD TYPICALLY. IN ADDITION, CONTRACTOR SHALL PROVIDE ADDITIONAL PLYWOOD ADJACENT TO AND MATCHING SHEAR PANELS AND STRUCTURAL PLYWOOD AS REQUIRED TO PROVIDE CONTINUOUS, FLUSH, EVEN SUBSTRATE FOR FINISH MATERIALS. SUBSTRATE SHALL BE CONTINUOUS BETWEEN ALL INSIDE CORNER(S) AND/OR OUTSIDE CORNER(S). UNLESS SPECIFICALLY DETAILED OTHERWISE, NAILING FOR ADDITIONAL PLYWOOD SHALL BE 10d @ 6"o.c. EDGE 10d @ 12"o.c. FIELD.

FLOOR AND FOUNDATION PLAN

1/8" = 1'-0"

DRAWING NAME: 99027S2.DWG

GROSSMAN & SPEER ASSOCIATES, INC.
STRUCTURAL ENGINEERS #99027
836 SOUTH ARROYO PARKWAY
PASADENA, CALIFORNIA 91105-2520
PH (626) 577-1848
FAX (626) 577-1328
REGISTERED PROFESSIONAL ENGINEER
NO. C 2393
EXP. 12-31-00
STRUCTURAL
STATE OF CALIFORNIA

CARMICHAEL-KEMP ARCHITECTS
12970 LOS FELIZ PLACE • LOS ANGELES • 818-577-1659

REGISTERED PROFESSIONAL ARCHITECT
J. SCHAEFER
NO. C 20592
EXPIRES NOV 30, 99
ARCHITECTURAL
STATE OF CALIFORNIA

GENERATION STAMP
DIV. OF THE STATE ARCHITECT
OFFICE OF PUBLIC SCHOOL CONSTRUCTION

APPL. NO. 1-101516
AC ___ FLS ___ SS ___
DATE DEC. 1 4 1999

NEW SCIENCE BUILDING at MT. MIGUEL HIGH SCHOOL
1800 Sweetwater Road, Spring Valley, CA 91977
GROSSMONT UNION HIGH SCHOOL DISTRICT

FLOOR AND FOUNDATION PLAN

JOB NO.	9822-1
DATE	12-14-99
SHEET NUMBER	S-2
BINDING ORDER	50 of 82

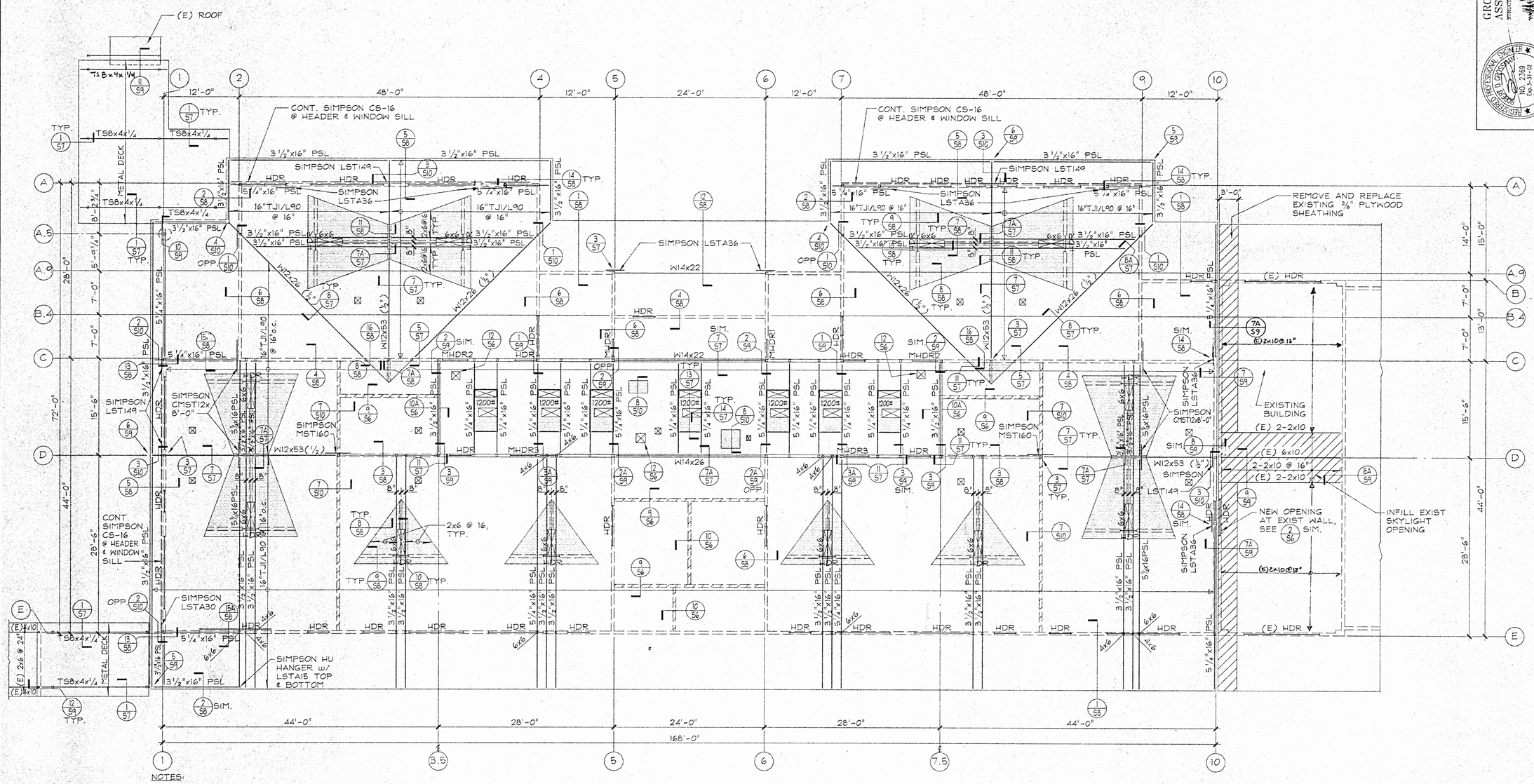

NOTES:

1. ROOF SHALL CONSIST OF 5/8" PLYWOOD SHEATHING.
2. SEE GENERAL NOTES FOR TYPE OF PLYWOOD AND PANEL INDEX.
3. FOR ROOF PLYWOOD NAILING & PANEL LAYOUT SEE 3/56.
4. SEE ARCH'L DRAWINGS FOR TOP OF SHEATHING ELEVATIONS.
5. ( ) INDICATES UPWARD BEAM CAMBER BETWEEN SUPPORTS.
6. INDICATES MECH'L. EQUIPMENT AND DORMER ROOF FRAMED OVER MAIN ROOF.
7. INDICATES ROOF OPENING. FOR TYP. SMALL ROOF OPENING, SEE 11/56 U.N.O.
8. HDR INDICATES HEADER, SEE 2/56.
9. FOR TOP PLATE SPLICE DETAIL, SEE 6/56 TYP. U.N.O.
10. —— INDICATES THE DIRECTION OF THE JOIST SPAN.
11. PROVIDE BRIDGING OR BLOCKING AS REQUIRED BY I - JOIST MANUFACTURER.
12. ALL DIMENSIONS SHOWN ARE TO FACE OF STUD, FACE OF MASONRY OR CENTER LINE OF COLUMN, TYPICAL U.N.O.
13. INDICATES NON-BEARING AND NON-SHEAR WALL. HEADERS ARE NOT SHOWN. SEE 2/56 AS OCCURS. OFFSET I-JOIST AS REQUIRED PER 7/510.
14. ALL WOOD POSTS AND STEEL COLUMNS ARE AT CENTER LINE WALL TYPICAL U.N.O.
15. SEE TYPICAL DETAILS AND ARCHITECTURAL DRAWINGS FOR INFORMATION NOT SHOWN.
16. MHDR INDICATES HEADER AT DUCT OPENING, SEE 4/59.
17. (E) INDICATES EXISTING.
18. ARCADE ROOFS SHALL BE 3"x20/20 GA. INVERTED NF-24 DECK BY BPH STEEL BUILDING PRODUCTS. -Smin=.850 IN^3, Imin=1.666 IN^4.

N

ROOF FRAMING PLAN

1/8" = 1'-0"

DRAWING NAME: 9902753.DWG

GROSSMAN & SPEER ASSOCIATES, INC.
STRUCTURAL ENGINEERS #99027
528 MAIN AVENUE, SUITE #200
GLENDALE, CALIFORNIA 91203
(818) 507-1553
FAX (818) 507-1556
REGISTERED PROFESSIONAL ENGINEER NO. 2369 Exp. 3-31-02 STRUCTURAL STATE OF CALIFORNIA

CARMICHAEL-KEMP ARCHITECTS
2870 LOS FELIZ PLACE • LOS ANGELES • 666-7285

REGISTERED PROFESSIONAL ENGINEER TAMARA J. SCHAEFFER NO. C 20592 EXPIRES NOV. 30 STATE OF CALIFORNIA

IDENTIFICATION STAMP
DIV. OF THE STATE ARCHITECT
OFFICE OF REGULATION SERVICES
APPL NO 4-101516
AC ___ FLS ___ SS ___
DATE DEC 14 1999

NEW SCIENCE BUILDING at MT. MIGUEL HIGH SCHOOL
1800 Sweetwater Road, Spring Valley, CA 91977

GROSSMONT UNION HIGH SCHOOL DISTRICT

ROOF FRAMING PLAN

JOB NO.	9822-1
DATE	12-14-99
SHEET NUMBER	S-3
BINDING ORDER	31 of 82

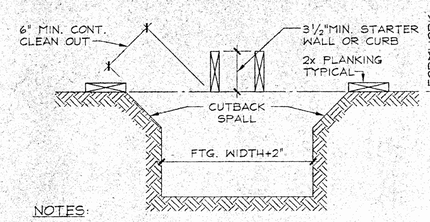

NOTES:

1. THIS DETAIL MAY ONLY BE USED WHEN SPECIFICALLY APPROVED BY ARCHITECT/ENGINEER AND D.S.A. INSPECTOR.
2. THIS DETAIL SHOWS THE MINIMUM FORMWORK REQUIRED, UNLESS FULLY FORMED.
3. FORMWORK NOT PERMITTED BELOW GRADE UNLESS FULLY FORMED.
4. STAKES NOT PERMITTED WITHIN FOOTING SECTION.

TYP. FOOTING FORMWORK | 1

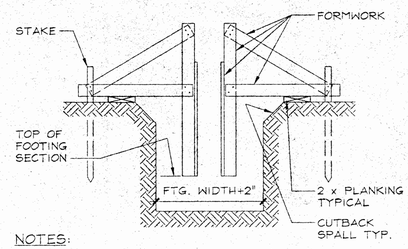

NOTES:

1. THIS DETAIL MAY ONLY BE USED WHEN SPECIFICALLY APPROVED BY ARCHITECT/ENGINEER AND D.S.A. INSPECTOR.
2. STAKES NOT PERMITTED WITHIN FOOTING SECTION.

TYP. FOOTING FORMWORK | 2

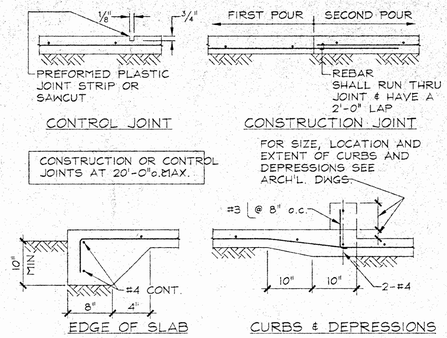

TYP. SLAB ON GRADE | 3

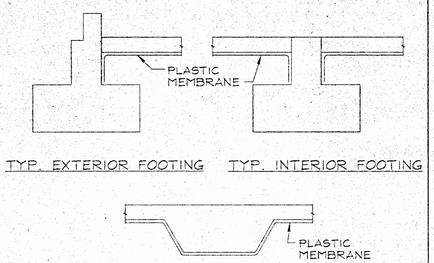

TYP. VAPOR BARRIER | 4

GROSSMAN & SPEER ASSOCIATES, INC.
STRUCTURAL ENGINEERS #99027
339 TAHOE AVENUE, SUITE #200
GLENDALE, CALIFORNIA 91205
(818) 507-1700
FAX (818) 507-1356

REGISTERED PROFESSIONAL ENGINEER
STRUCTURAL
No. 2369
Exp. 3-31-02
STATE OF CALIFORNIA

CARMICHAEL-KEMP ARCHITECTS
2207 LOU MENK DRIVE, BLDG. "B" FAYETTEVILLE, GA 30214
(770) 461-1115 FAX (770) 461-1215

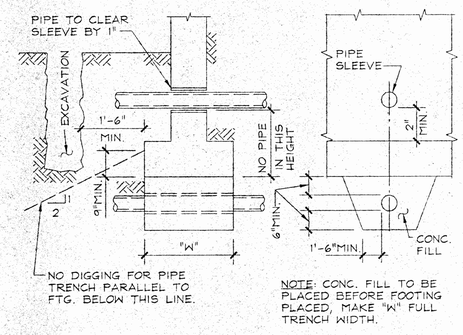

NOTE: CONC. FILL TO BE PLACED BEFORE FOOTING PLACED, MAKE "W" FULL TRENCH WIDTH.

TYP. PIPE AT FOOTING | 5

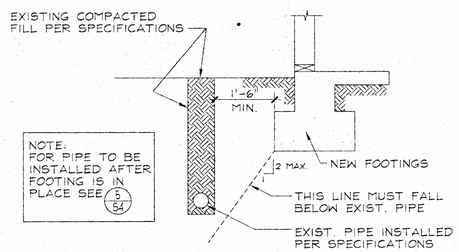

NOTE: FOR PIPE TO BE INSTALLED AFTER FOOTING IS IN PLACE SEE 5/S4

TYP. FOOTING ADJ. TO PIPE | 6

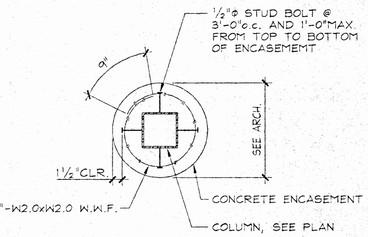

TYP. COLUMN ENCASEMENT | 7

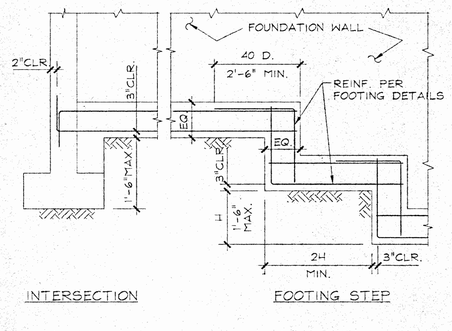

TYP. STEPPED FOOTING | 8

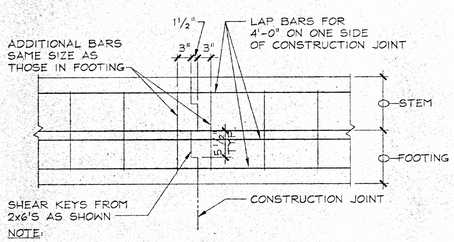

NOTE:
1) JOINT LOCATION TO BE APPROVED BY STRUCTURAL ENGINEER.

TYP. FTG. CONSTRUCTION JOINT | 9

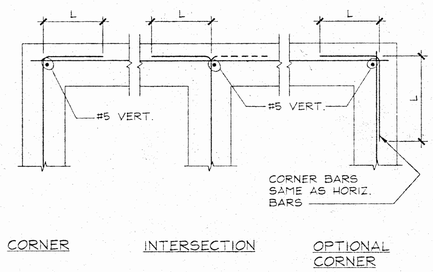

L=40 DIA. OR 2'-0" MIN. FOR CONCRETE
L=48 DIA. OR 2'-0" MIN. FOR MASONRY

TYP. FTG. OR WALL INTERSECTION | 10

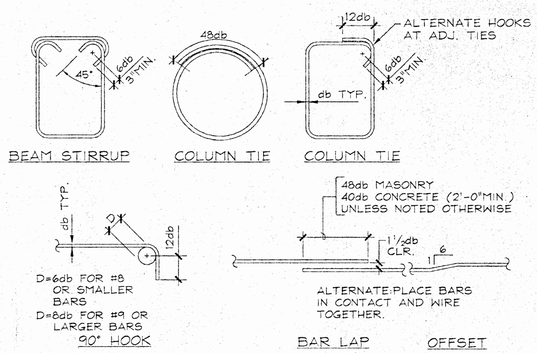

TYP. BAR BENDS & LAPS | 11

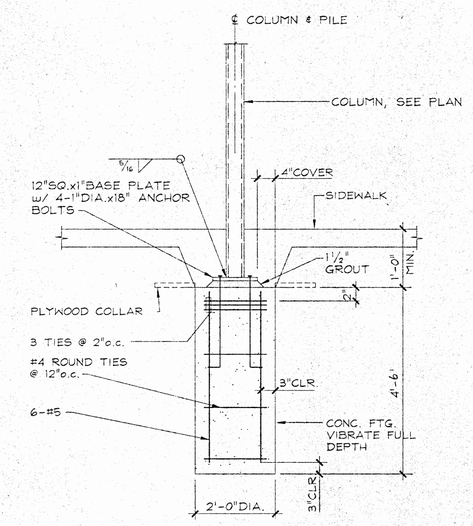

NOTES:
1. GEOTECHNICAL ENGINEER MUST INSPECT THE PILE EXCAVATION.
2. VERT. REBAR SHALL BE EQUALLY SPACED AROUND INSIDE OF ROUND TIES.

TYP. ARCADE PILE | 16

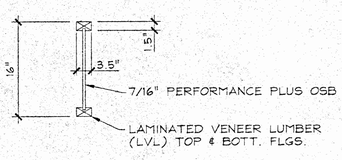

SECTION PROPERTIES FOR D + L LOADS	16"TJI/L90
MAX. RESISTIVE MOMENT	12425 FT. LB.
MAX. VERTICAL SHEAR	2330 LB.
EI x 10⁶	1246 LB. IN.²

TYP. I JOIST DETAIL | 13

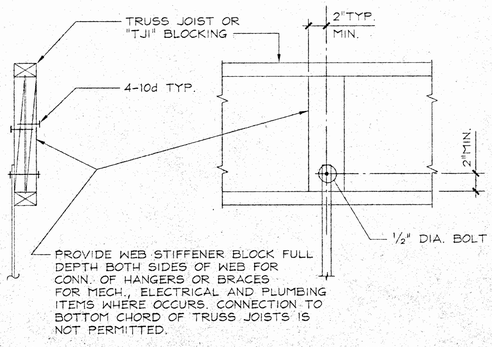

TYP. HANGER AT I JOIST | 14

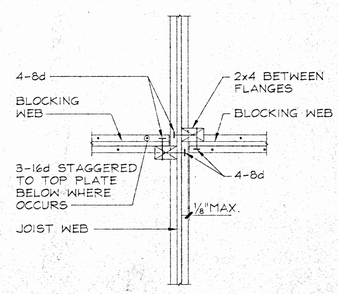

TYP. I JOIST BLOCKING | 15

IDENTIFICATION STAMP
DIV. OF ARCHITECT
OFFICE OF REGULATION SERVICES
APPL NO. 4-101516
AC FLS SS
DATE DEC 14 1999

NEW SCIENCE BUILDING at MT. MIGUEL HIGH SCHOOL
1800 Sweetwater Road, Spring Valley, CA 91977
GROSSMONT UNION HIGH SCHOOL DISTRICT

TYPICAL DETAILS

JOB NO. 9822-1
DATE 12-14-99
SHEET NUMBER
S-4
BINDING ORDER 52 of 82

DRAWING NAME: 99027S4.DWG

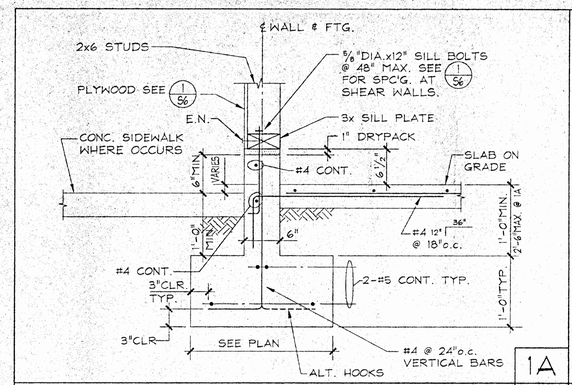

TYP. EXTERIOR WALL FOOTING 1A 1

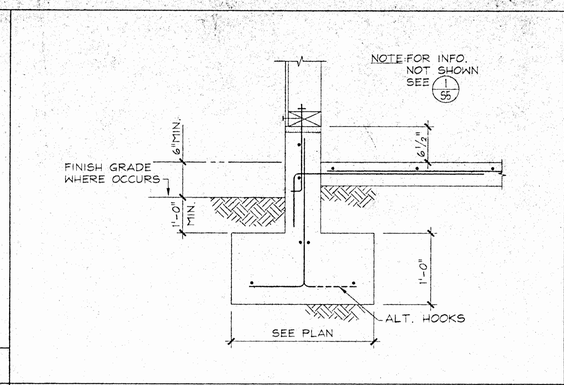

TYP. EXTERIOR WALL FOOTING 2

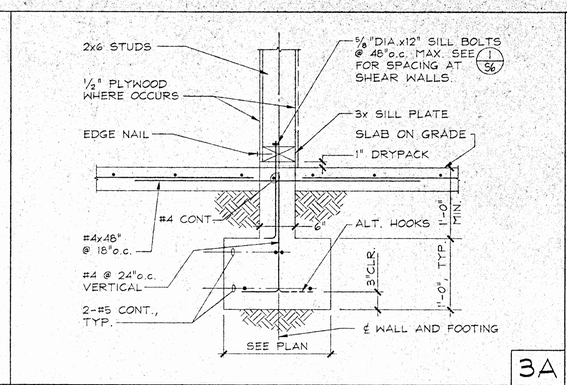

TYP. INTERIOR WALL FOOTING 3A 3

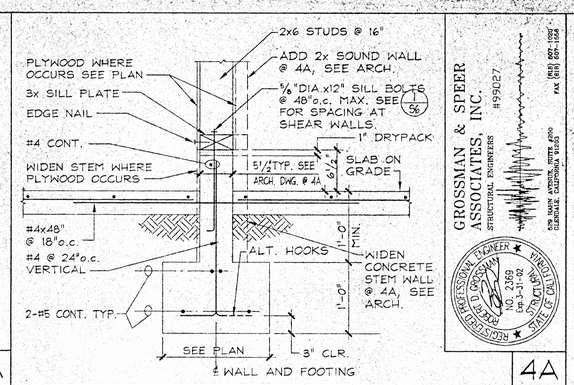

SECTION AT INTERIOR WALL CURB 4A 4

GROSSMAN & SPEER ASSOCIATES, INC.
STRUCTURAL ENGINEERS
#99027
5170 MANN AVENUE, SUITE #200
GLENDALE, CALIFORNIA 91203
(818) 609-1094
FAX (818) 609-1854
REGISTERED PROFESSIONAL ENGINEER
ROSS GROSSMAN
NO. 2369
Exp. 3-31-02
STRUCTURAL
STATE OF CALIFORNIA

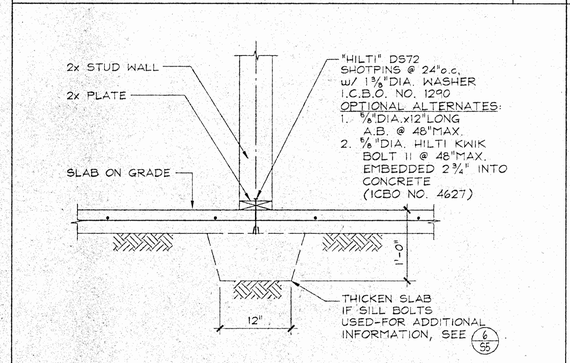

TYPICAL NON BEARING WALL 5

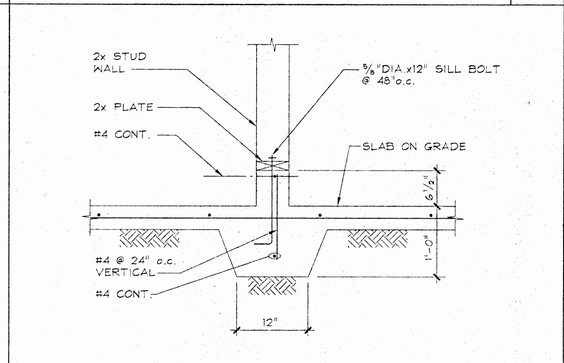

TYP. NON BEARING WALL AT CURB 6

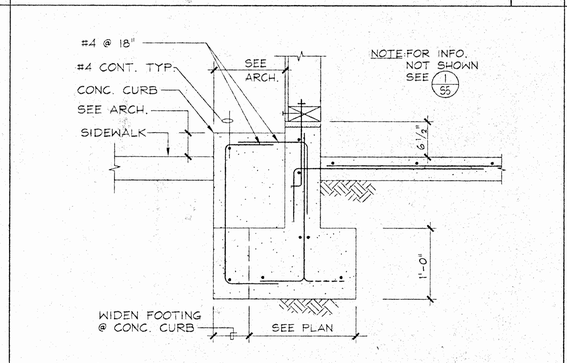

SECTION 7

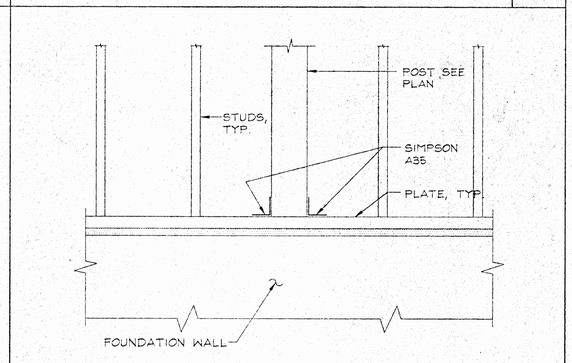

TYP. WOOD POST IN WALL 8

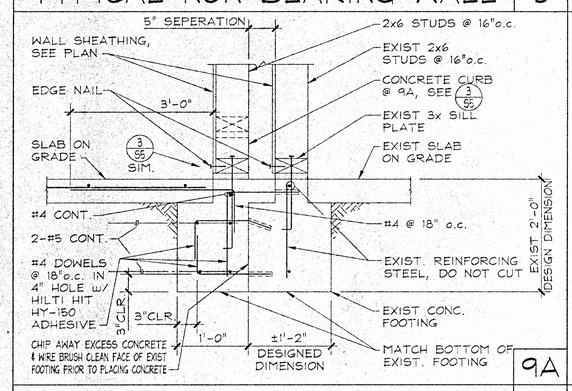

SECTION 9A 9

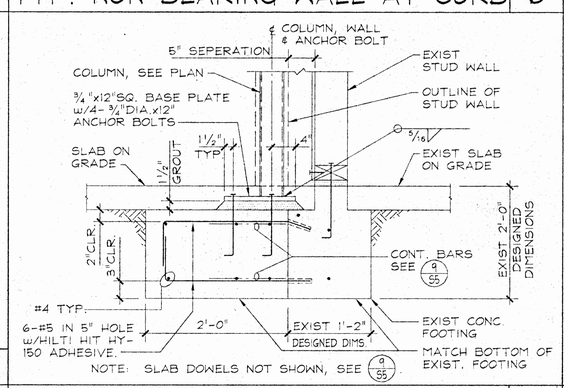

SECTION 10

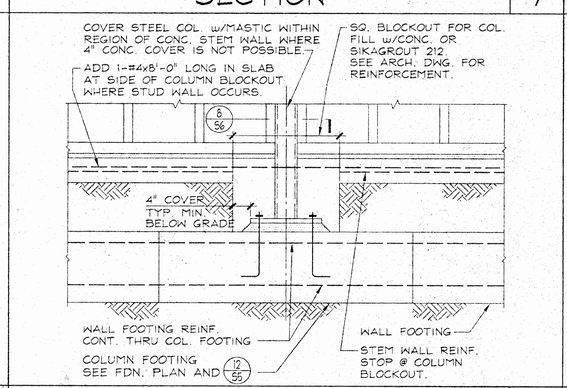

TYP. STL. COL. AT WALL 11

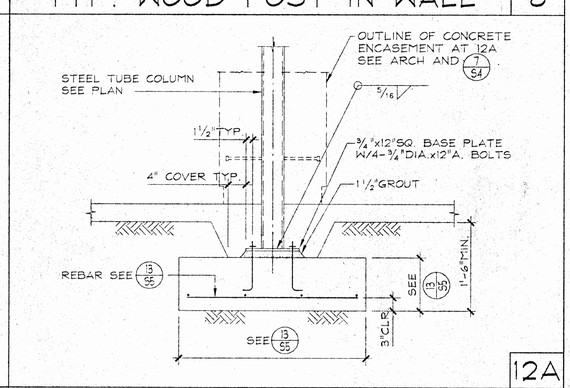

TYP. PAD FOOTING AT STEEL COL. 12A 12

FOOTING SCHEDULE			
TYPE	FOOTING SIZE	REBAR (EA. WAY)	REMARKS
A	2'-0"SQ.x12"	3-#5	
B	3'-0"SQ.x12"	4-#5	
C	4'-0"SQ.x12"	6-#5	
D	3'-0"x 10'-6"	#5 @ 10"o.c.	

NOTES:
1. THICKEN FOOTING AS REQUIRED TO MATCH INTERSECTING WALL FOOTING THICKNESS AS OCCURS.
2. FOR TYPICAL FOOTING AND COLUMN BASE PLATE DETAIL SEE 12/S6

FOOTING SCHEDULE 13

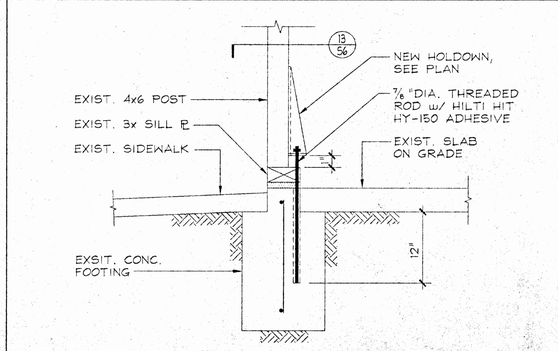

SECTION 14

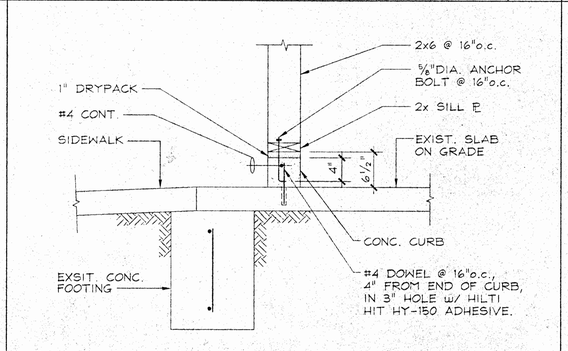

TYP. WALL INFILL DETAIL 15

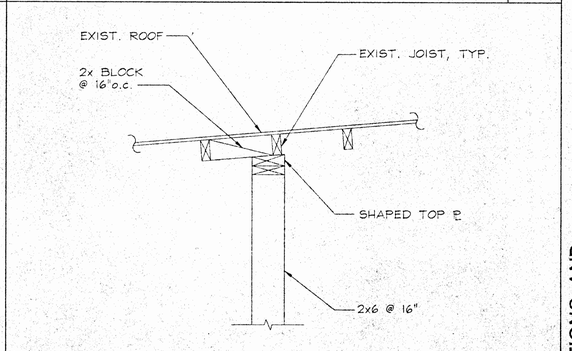

TYP. WALL INFILL DETAIL 16

SECTIONS AND DETAILS

CARMICHAEL-KEMP ARCHITECTS
2701 LOS FELIZ PLACE • GLENDALE, CA 91039 • (818) 956-1115

IAN J. SCHAEFER
C 20592
EXPIRES NOV 30, 99
ARCHITECT
STATE OF CALIFORNIA

IDENTIFICATION STAMP
DIV. OF STATE ARCHITECT
OFFICE OF REGULATION SERVICES
APPL. NO 4-101516
AC FLS SS
DATE DEC 1 6 1999

NEW SCIENCE BUILDING at MT. MIGUEL HIGH SCHOOL
1800 Sweetwater Road, Spring Valley, CA 91977
GROSSMONT UNION HIGH SCHOOL DISTRICT

JOB NO. 9822-1
DATE 12-14-99
SHEET NUMBER
S-5
BINDING ORDER 53 OF 82

DRAWING NAME: 99027S3.DWG

NOTES:
1. PLYWOOD SHALL CONFORM TO UBC STD. 23-2 & PSI-83.
2. NAILS SHALL BE COMMON WIRE NAILS
3. INDIVIDUAL PLYWOOD PIECES SHALL NOT BE LESS THAN 2'-0" IN LEAST DIMENSIONS NOR LESS THAN 8 SQ. FT.
4. PREBORE HOLES WHERE MEMBERS TEND TO SPLIT.
5. STUDS AND BLOCKING AT PANEL JOINTS SHALL BE 3x OR WIDER AND NAILS SHALL BE STAGGERED WHERE PLYWOOD IS APPLIED ON BOTH FACE A WALL.
6. STUDS AND BLOCKING AT PANEL JOINTS SHALL BE 3x OR WIDER AND NAILS SHALL BE STAGGERED WHERE NAILS ARE SPACED 4" OR LESS ON CENTER.
7. FOR SMALL WALL OPENING, SEE (4/S6)
8. RETIGHTEN ALL SILL BOLTS BEFORE CLOSING IN.
9. HOLDOWN ANCHORS ARE NOT A SUBSTITUTE FOR SILL BOLTS.
10. THE MIN. EDGE DISTANCE SHALL BE 7/8" FOR 2-INCH NOMINAL RECEIVING MEMBERS & 1/2" FOR 3" NOMINAL RECEIVING MEMBERS.
11. FLAT BLOCKING RECEIVING 10d NAILS SHALL BE 3" BY 4" NOMINAL OR LARGER.
12. LOCATE AN ANCHOR BOLT WITHIN 9" FROM END OF EACH SECTION OF SILL PLATE.

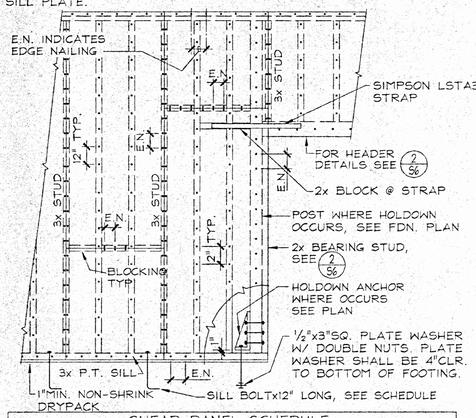

SHEAR PANEL SCHEDULE				
PANEL TYPE	TYPE OF SHEATHING	EDGE NAIL	SILL BOLT	REMARKS
(A)	1/2" PLYWOOD	10d @ 6"	5/8"DIA.@32"	
(B)	1/2" PLYWOOD	10d @ 4"	5/8"DIA.@32"	
(C)	1/2" PLYWOOD	10d @ 3"	5/8"DIA.@24"	

TYP. SHEAR WALL DETAIL | 1

NOTES:
1. TYP. FRAMING MEMBERS SHALL BE 2x EXCEPT AS OTHERWISE INDICATED. SEE (1/S6) FOR LOCATIONS WHERE 3x FRAMING IS REQD.
2. FOR SHEARWALL DETAILS SEE (1/S6)

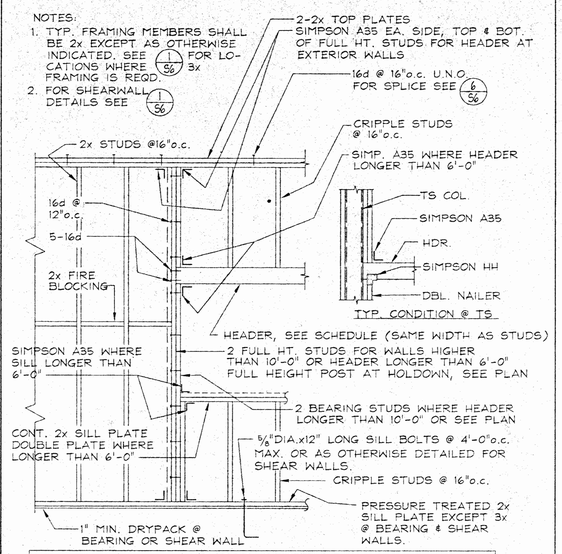

HEADER SCHEDULE		
MAX. SPAN	HEADER DEPTH UNLESS NOTED ON PLANS	
	BEARING & SHEAR WALL	NON-BEARING
4'-0"	8"	4"
6'-0"	10"	6"
8'-0"	12"	8"
10'-0"	14" PLS	10"
12'-0"	16" PLS	

TYPICAL HEADER DETAIL | 2

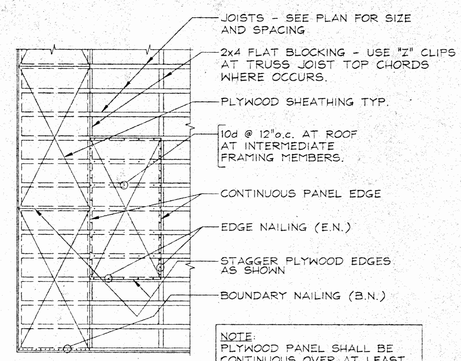

NOTE:
PLYWOOD PANEL SHALL BE CONTINUOUS OVER AT LEAST TWO SPANS AND HAVE A 4'-0" MIN. LENGTH AND A MIN. WIDTH OF 2'-0".

TYPE	SHEATHING	BOUNDARY AND CONT. PANEL EDGES	OTHER PANEL EDGES	REMARKS
(TYP)	1/2"PLYWOOD	10d @ 6"	10d @ 6"	
AT EXIST. BUILDING	3/8"PLYWOOD	8d @ 6"	8d @ 6"	

TYP. ROOF PLYWOOD DETAIL | 3

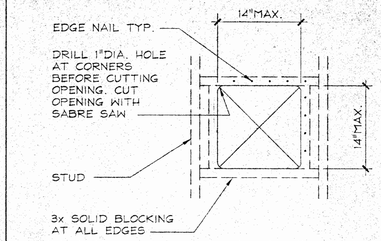

NOTE:
NO OPENING OVER ONE STUD WIDTH SHALL OCCUR IN PLYWOOD SHEAR WALLS UNLESS SPECIFICALLY DETAILED.

TYP. SMALL SHEAR WALL OPENING | 4

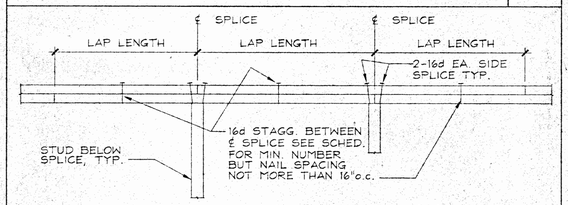

TYPE	MINIMUM NO. OF 16d EACH SIDE OF SPLICE	MINIMUM LAP LENGTH (FT.)
NON-SHEARWALL	8-16d	4
SHEARWALL	24-16d U.N.O.	4

NOTES:
1. USE 20d NAILS FOR 3x OR 4x TOP PLATE WHERE OCCURS, PRE-DRILL HOLES

TYP. TOP PLATE SPLICE | 6

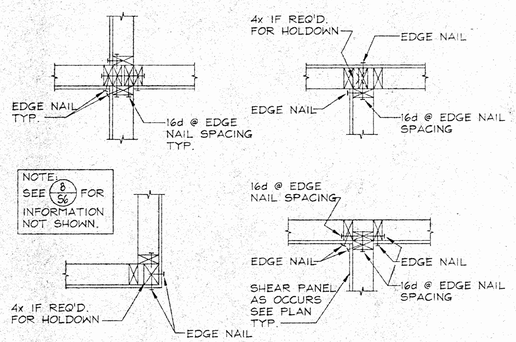

TYP. SHEAR WALL CORNER DETAIL | 7

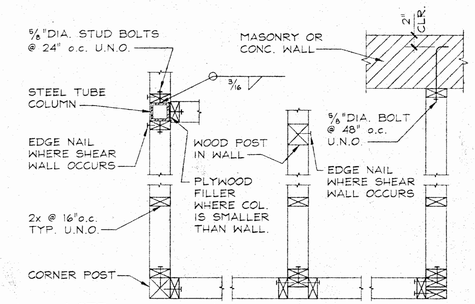

NOTE:
ALL NAILS 16d @ 12" o.c. STAGGER U.N.O.

TYP.WALL CONER DETAILS | 8

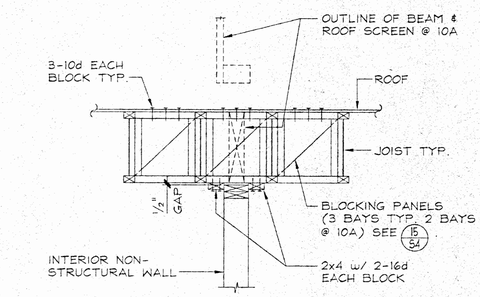

TYP. NONBEARING WALL | 10A

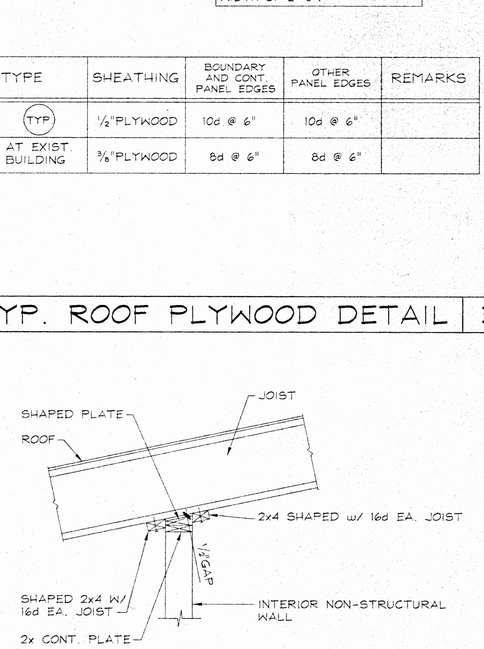

TYP. NONBEARING WALL | 9

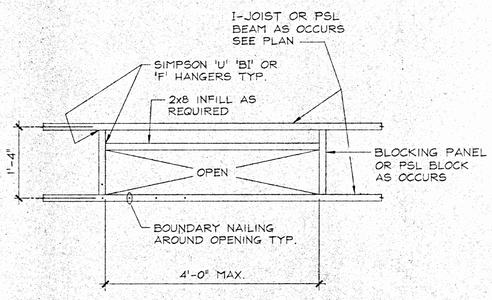

TYP SMALL ROOF OPENING | 11

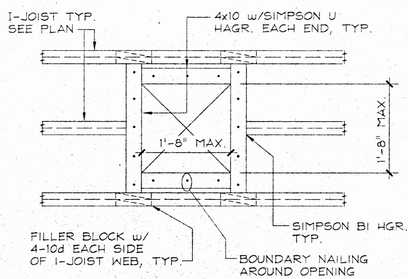

NOTE: ANCHOR PREFAB EQUIP. CURB TO ℄ OF 4x10 w/2-3/8" DIA.x6" LAG SCREWS EACH SIDE (8 TOTAL).

DETAIL | 12

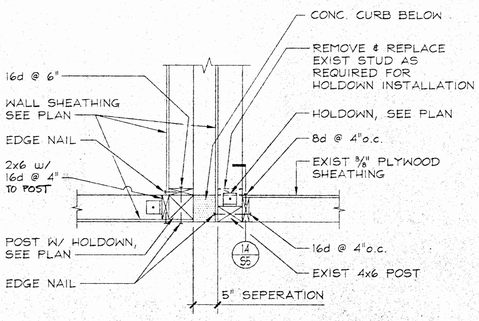

DETAIL | 13

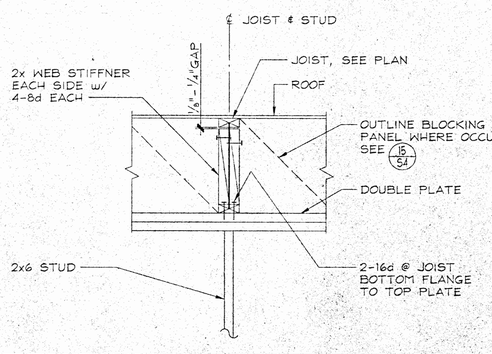

TYP. I - JOIST DETAIL | 14

SECTIONS AND DETAILS

GROSSMAN & SPEER ASSOCIATES, INC.
STRUCTURAL ENGINEERS
#99027
520 MAIN AVENUE, SUITE #200
GLENDALE, CALIFORNIA 91203
(818) 507-1025
FAX (818) 507-1026

REGISTERED PROFESSIONAL ENGINEER
ROBERT D. GROSSMAN
No. S2169
Exp. 3-31-02
STRUCTURAL
STATE OF CALIFORNIA

CARMICHAEL-KEMP ARCHITECTS
2001 LOS FELIZ BLVD. ● LOS ANGELES ● 866-7165

REGISTERED PROFESSIONAL ENGINEER
JAMES C. SCHAEFFER
No. C 20592
EXPIRES NOV 30 '99
STRUCTURAL
STATE OF CALIFORNIA

IDENTIFICATION STAMP
DIV. OF STATE ARCHITECT
OFFICE OF REGULATION SERVICES
APPL. NO. 4-101516
AC ___ FLS ___ SS ___
DATE ___ DSA ___ 8-6-1998

NEW SCIENCE BUILDING at MT. MIGUEL HIGH SCHOOL
1800 Sweetwater Road, Spring Valley, CA 91977
GROSSMONT UNION HIGH SCHOOL DISTRICT

JOB NO. 9822-1
DATE 12-14-99
SHEET NUMBER
S-6
BINDING ORDER 54 of 62

DRAWING NAME: 99027S6.DWG

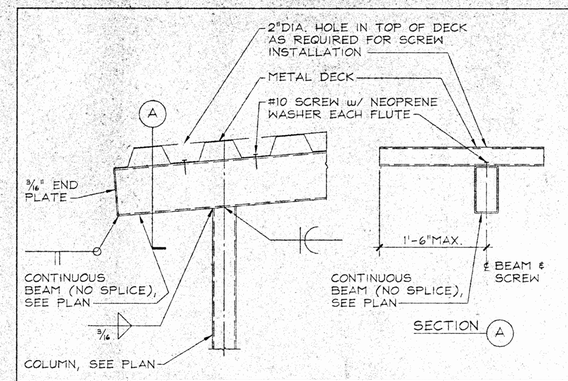

TYP. ARCADE DETAIL | 1

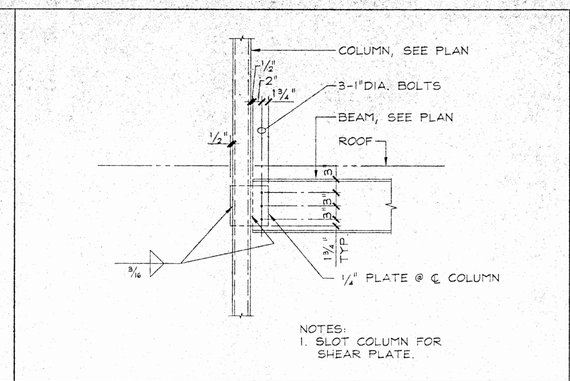

NOTES:
1. SLOT COLUMN FOR SHEAR PLATE.

TYP. STEEL BM. TO COL. CONN. | 2

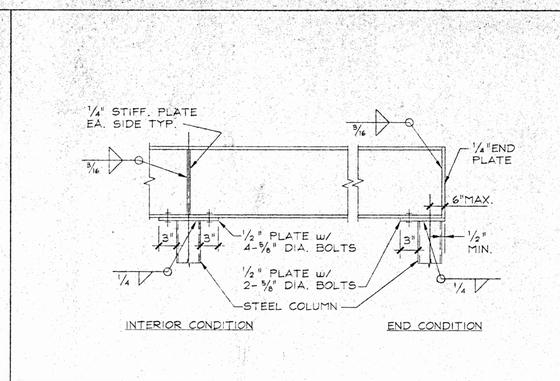

TYP. STEEL BM. TO COL. CONN. | 3

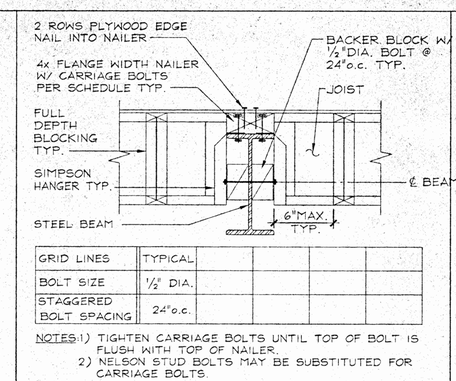

GRID LINES	TYPICAL				
BOLT SIZE	1/2" DIA.				
STAGGERED BOLT SPACING	24"o.c.				

NOTES: 1) TIGHTEN CARRIAGE BOLTS UNTIL TOP OF BOLT IS FLUSH WITH TOP OF NAILER.
2) NELSON STUD BOLTS MAY BE SUBSTITUTED FOR CARRIAGE BOLTS.

TYP. NAILER TO STEEL BEAM | 4

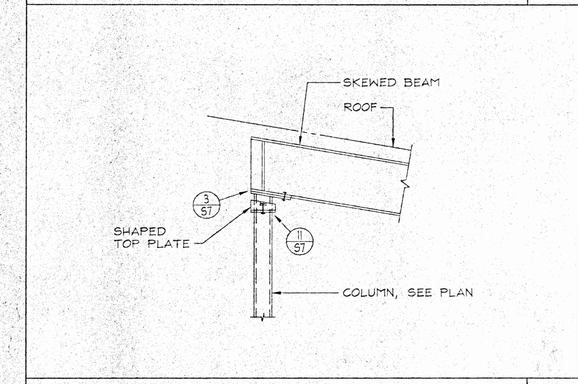

SECTION | 5

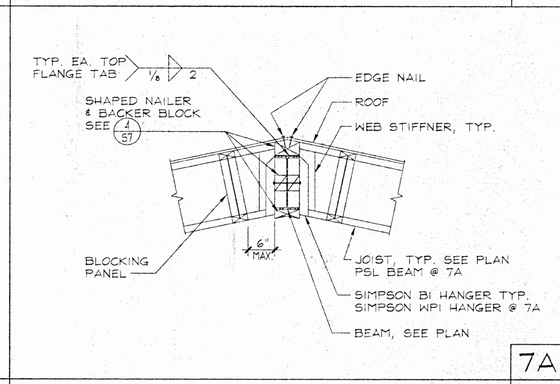

7A

TYP. RIDGE BEAM | 7

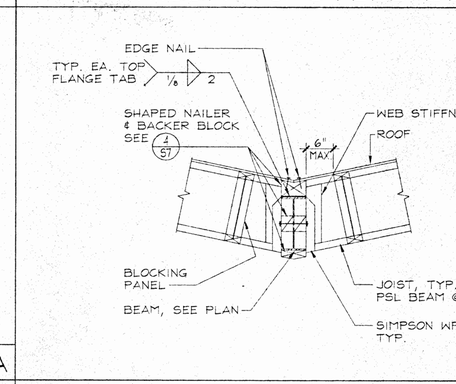

8A

TYP. VALLEY BEAM | 8

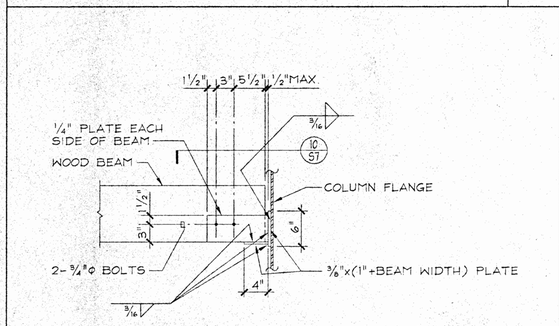

SECTION | 9

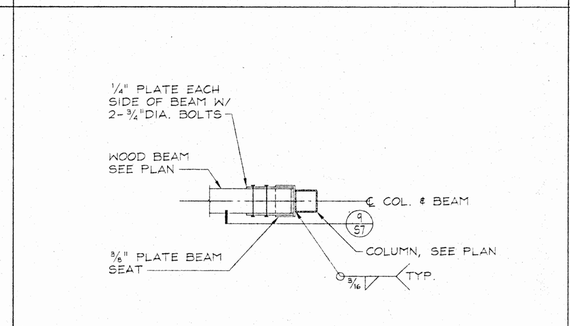

SECTION | 10

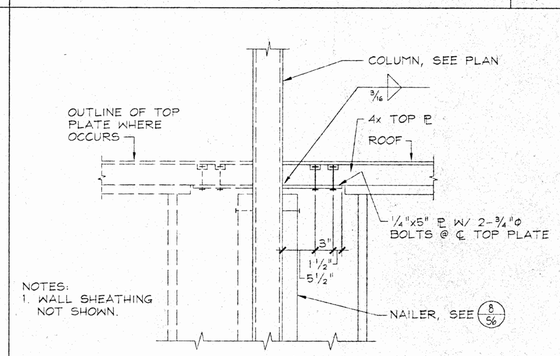

NOTES:
1. WALL SHEATHING NOT SHOWN.

SECTION | 11

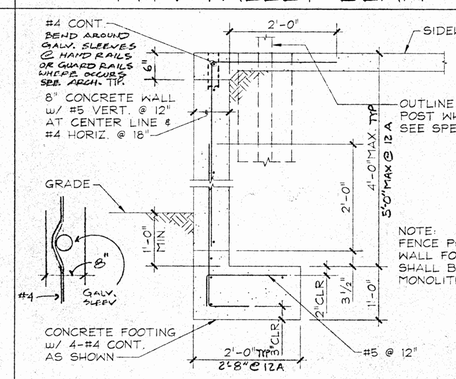

12A

SECTION | 12

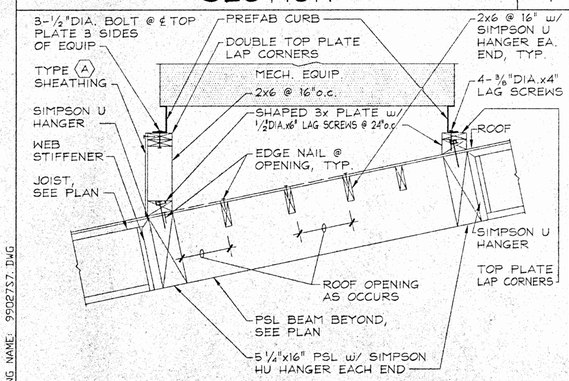

TYP. MECH. EQUIP. CURB | 13

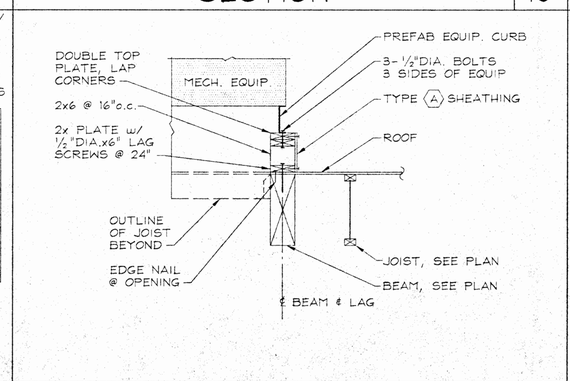

TYP. MECH. EQUIP. CURB | 14

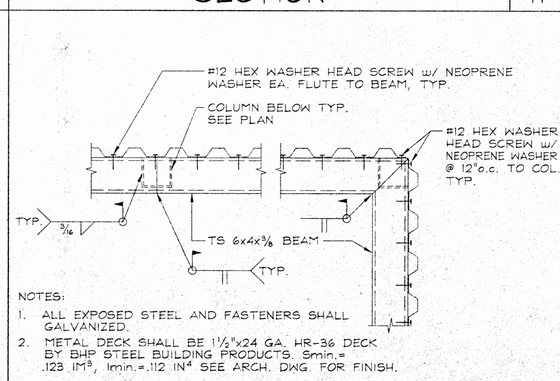

NOTES:
1. ALL EXPOSED STEEL AND FASTENERS SHALL GALVANIZED.
2. METAL DECK SHALL BE 1 1/2"x24 GA. HR-36 DECK BY BHP STEEL BUILDING PRODUCTS. $S_{min.}$ = .123 IN^3, $I_{min.}$ = .112 IN^4 SEE ARCH. DWG. FOR FINISH.

TYP. ROOF SCREEN DETAIL | 15

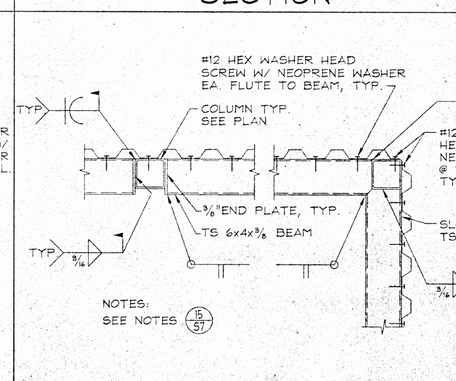

NOTES:
SEE NOTES 15/S7

TYP. ROOF SCREEN DETAIL | 16

DRAWING NAME: 9902757.DWG

SECTIONS AND DETAILS

CARMICHAEL-KEMP ARCHITECTS
2070 LOS FELIZ PLACE ○ LOS ANGELES ○ 866 7 2963

GROSSMAN & SPEER ASSOCIATES, INC.
STRUCTURAL ENGINEERS #99027
(818) 507-1000
(818) 507-1556
FAX
520 MAIN ATWOOD, SUITE 400
GLENDALE, CALIFORNIA 91203
REGISTERED PROFESSIONAL ENGINEER
STATE OF CALIFORNIA

REGISTERED ARCHITECT
JAMES C. SCHAEFFER
C 20592
EXPIRES NOV 30 99
STATE OF CALIFORNIA

IDENTIFICATION STAMP
DIV. OF THE STATE ARCHITECT
OFFICE OF REGULATION SERVICES
APPL NO 4-101516
AC
DATE DEC 1 1999

NEW SCIENCE BUILDING at MT. MIGUEL HIGH SCHOOL
1800 Sweetwater Road, Spring Valley, CA 91977

GROSSMONT UNION HIGH SCHOOL DISTRICT

JOB NO. 9822-1
DATE 12-14-99
SHEET NUMBER
S-7
BINDING ORDER 55 OF 82

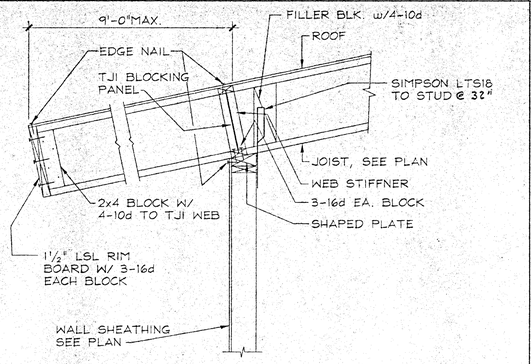

SECTION 1

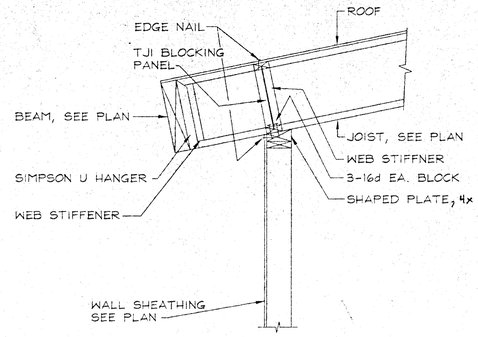

SECTION 2

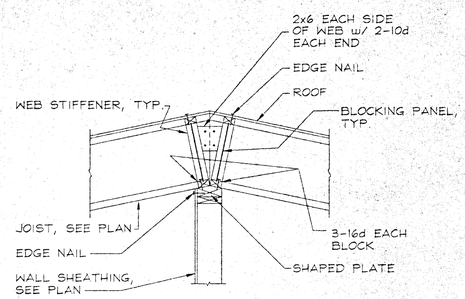

SECTION 3

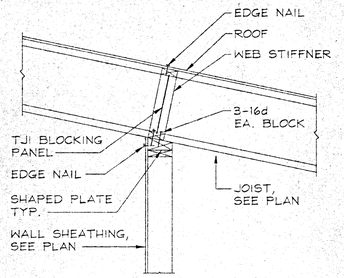

SECTION 4

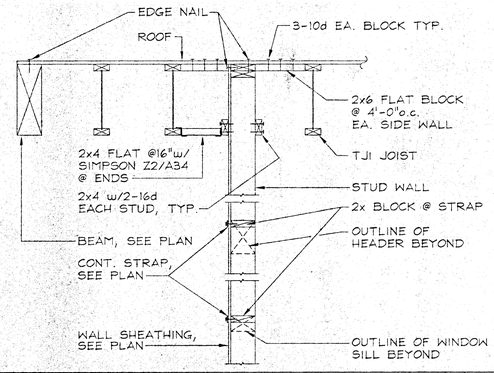

SECTION 5

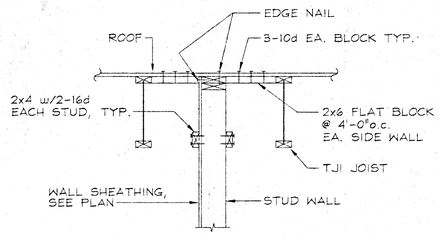

SECTION 6

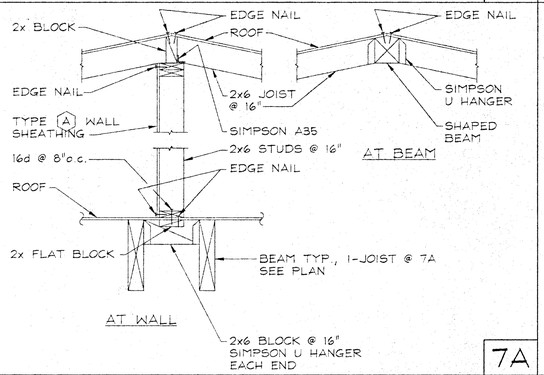

TYP. DORMER RIDGE DETAIL 7A

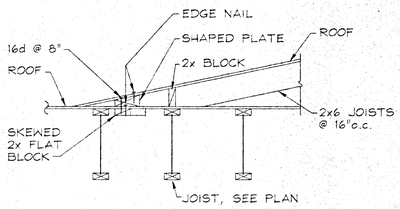

SECTION 8

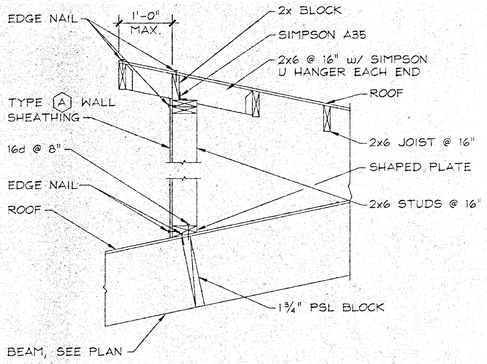

SECTION 9

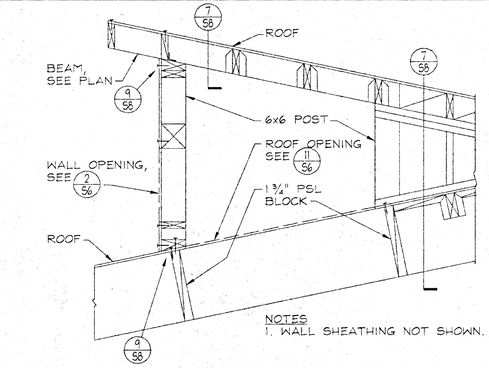

SECTION 10

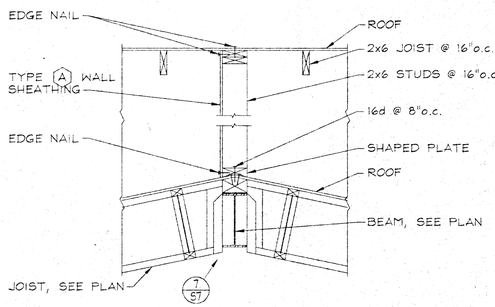

SECTION 11

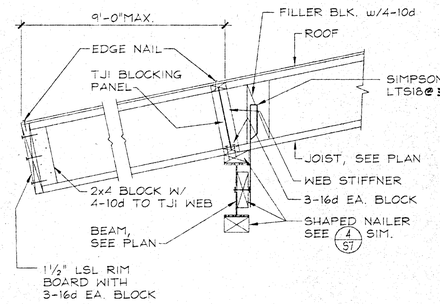

SECTION 12

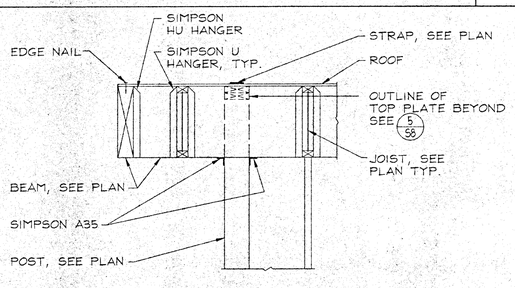

NOTES
1. WALL SHEATHING NOT SHOWN.

SECTION 13

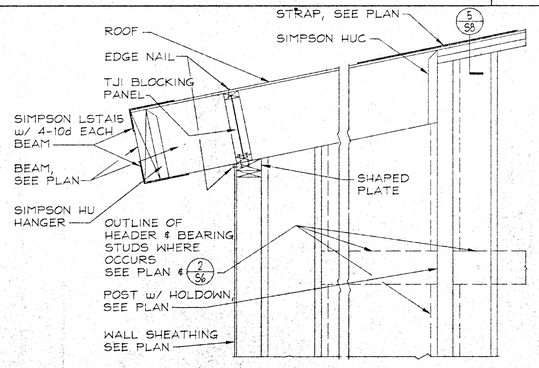

SECTION 14

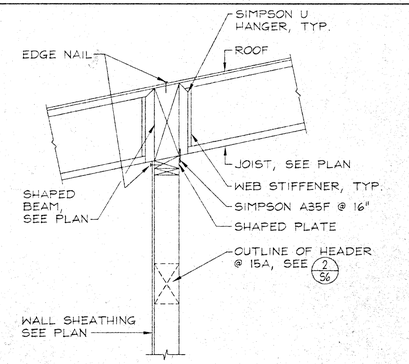

15A

SECTION 15

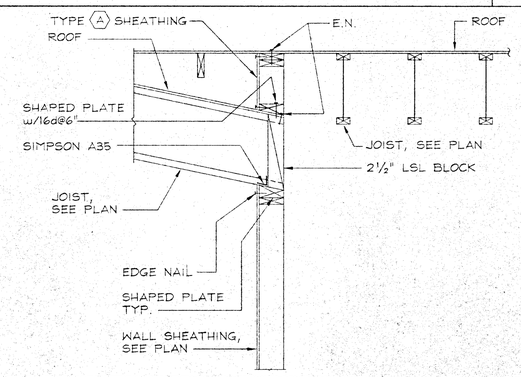

SECTION 16

SECTIONS AND DETAILS

GROSSMAN & SPEER ASSOCIATES, INC.
STRUCTURAL ENGINEERS
#99027
520 MAIN AVENUE, SUITE #200
GLENDALE, CALIFORNIA 91203
(818) 507-1500
FAX (818) 507-1568

REGISTERED PROFESSIONAL ENGINEER
STEVEN D. SPEER
NO. 2349
Exp. 12-31-00
STRUCTURAL
STATE OF CALIFORNIA

CARMICHAEL-KEMP ARCHITECTS AIA
2870 LOS FELIZ PLACE • LOS ANGELES • 666-7265

REGISTERED PROFESSIONAL ENGINEER
MARK A. SCHLESTER
C. 20592
EXPIRES NOV. 30, 99
STRUCTURAL
STATE OF CALIFORNIA

IDENTIFICATION STAMP
DSA, SCHOOL FACILITIES
OFFICE OF REGULATION SERVICES
APPL. NO. 4-101516
AC. TLS SS
DATE DEC 1 1 1999

NEW SCIENCE BUILDING at MT. MIGUEL HIGH SCHOOL
1800 Sweetwater Road, Spring Valley, CA 91977

GROSSMONT UNION HIGH SCHOOL DISTRICT

JOB NO. 9822-1
DATE 12-14-99
SHEET NUMBER
S-8
BINDING ORDER 56 OF 82

DRAWING NAME: 990278S.DWG

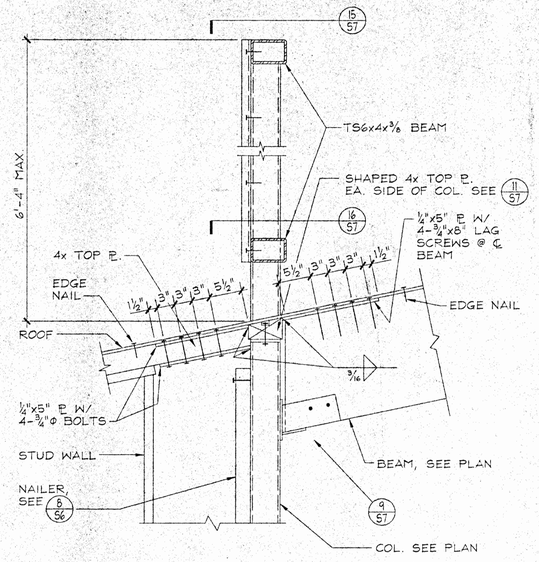

NOTE:
WALL SHEATHING NOT SHOWN.

SECTION 1

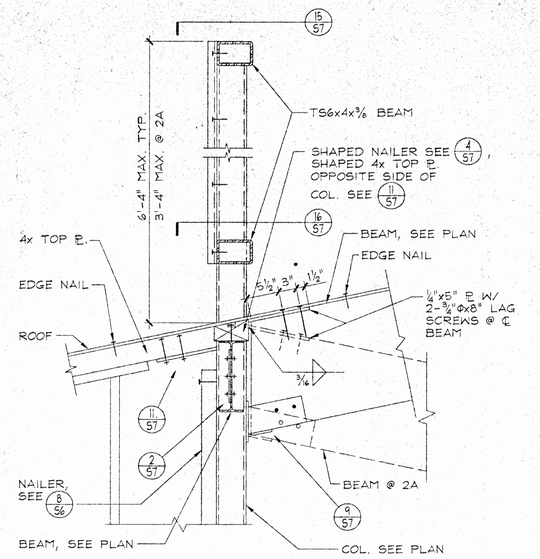

NOTE:
WALL SHEATHING NOT SHOWN.

2A

SECTION 2

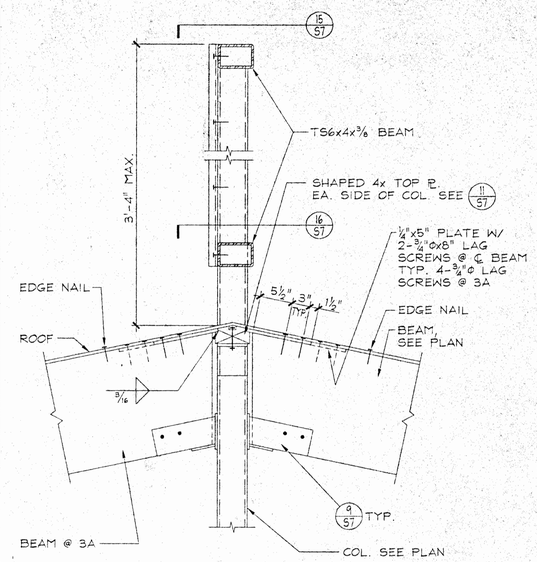

3A

SECTION 3

SCHEDULE		
OPENING	WxH	REMARKS
MHDR1	2'-9"x1'-5"	STRAPS AT WEST SIDE OF OPENING ONLY
MHDR2	4'-1"x1'-9"	
MHDR3	4'-1"x2'-3" 2'-3"x2'-3"	SIDE BY SIDE OPENINGS W/ CONT. STRAPS

NOTES:
1. WALL SHEATHING NOT SHOWN.

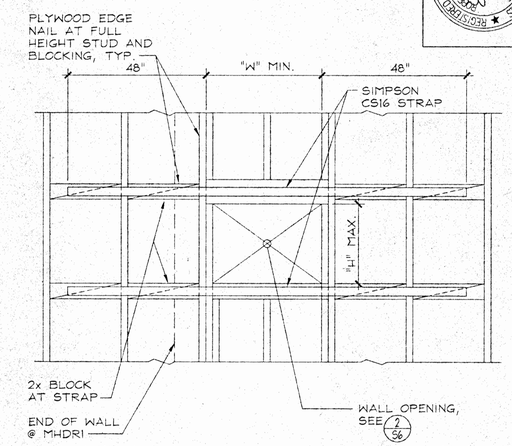

TYP. SHEAR WALL OPENING 4

GROSSMAN & SPEER ASSOCIATES, INC.
STRUCTURAL ENGINEERS
#99027
5150 RADIO ARTISTIC, SUITE #200
CLEARVALE, CALIFORNIA 95825
(916) 597-1510
FAX (916) 597-1558

REGISTERED PROFESSIONAL ENGINEER
NO. 2359
Exp. 3-31-02
STRUCTURAL
STATE OF CALIFORNIA

CARMICHAEL-KEMP ARCHITECTS AIA
2001 L STREET, SUITE 200 • SACRAMENTO, CA 95811 • (916) 441-1151

REGISTERED ARCHITECT
JOHN A. SCHAEFFER
C 20592
EXPIRES NOV 30, 19
STATE OF CALIFORNIA

CONFORMING STAMP
DIV. OF THE STATE ARCHITECT
OFFICE OF REGULATION SERVICES
APPL NO 4-101516
AC FLS SS
DATE DEC 1 4 1999

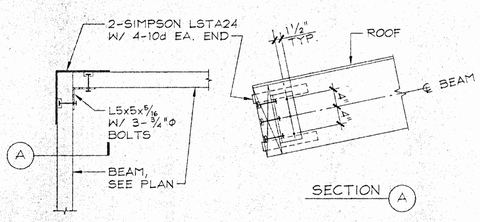

DETAIL 5

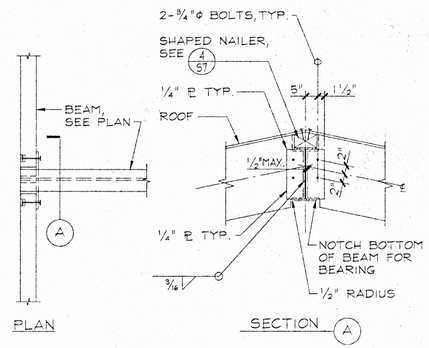

SECTION 6

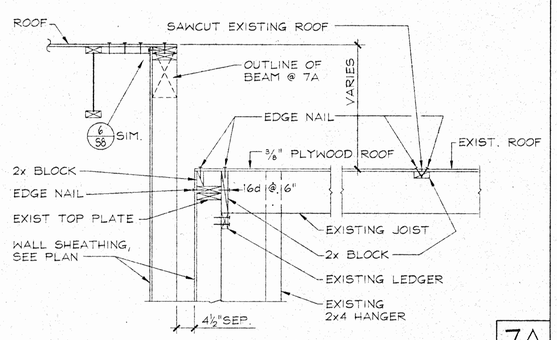

7A

SECTION 7

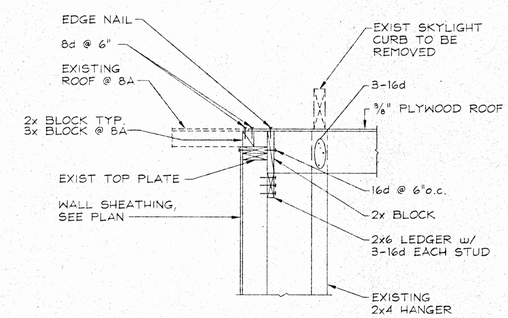

8A

SECTION 8

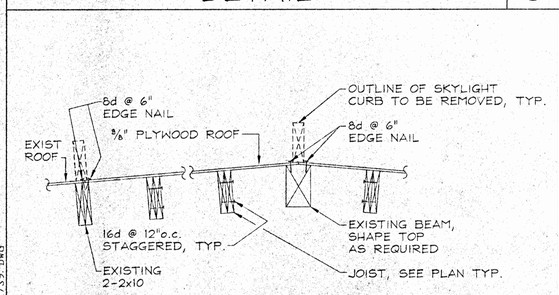

SECTION 9

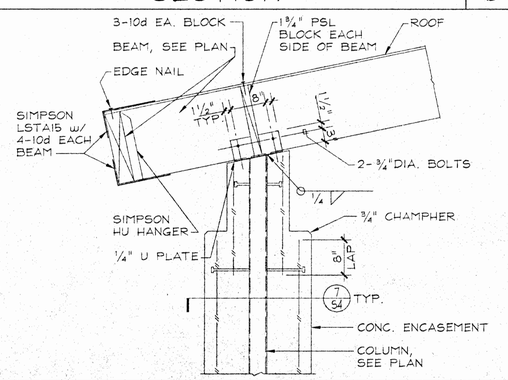

SECTION 10

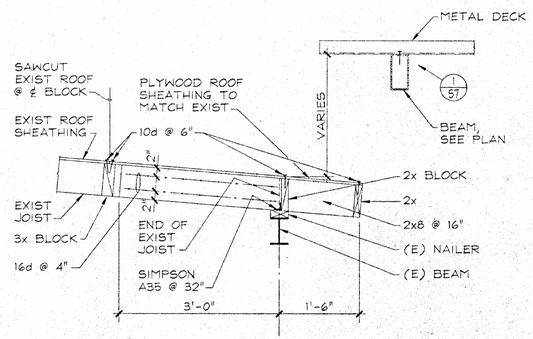

SECTION 11

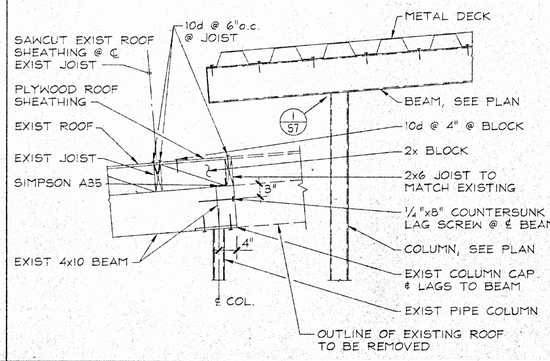

SECTION 12

SECTIONS AND DETAILS

NEW SCIENCE BUILDING at MT. MIGUEL HIGH SCHOOL
1800 Sweetwater Road, Spring Valley, CA 91977
GROSSMONT UNION HIGH SCHOOL DISTRICT

JOB NO.	9822-1
DATE	12-14-99
SHEET NUMBER	S-9
BINDING ORDER	57 of 82

DRAWING NAME: 99027S9.DWG

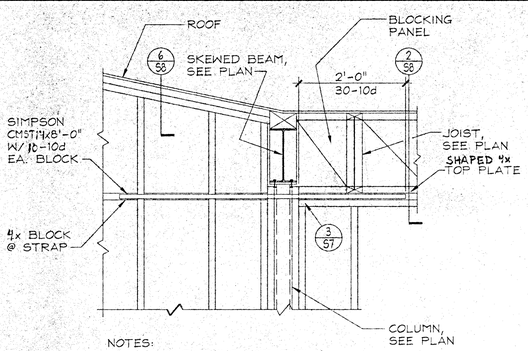

NOTES:
1. WALL SHEATHING NOT SHOWN.

SECTION 1

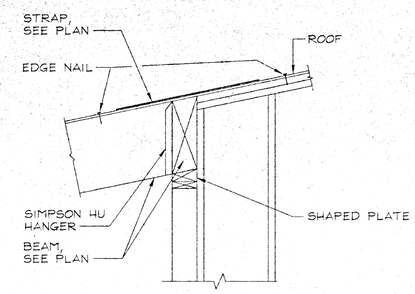

NOTES:
1. WALL SHEATHING NOT SHOWN.

SECTION 2

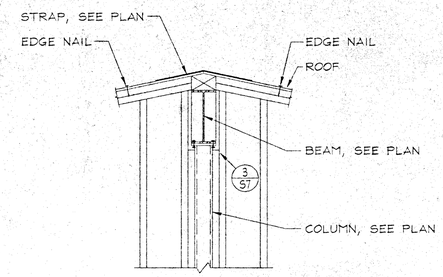

NOTES:
1. WALL SHEATHING NOT SHOWN.

TYP. RIDGE BEAM 3

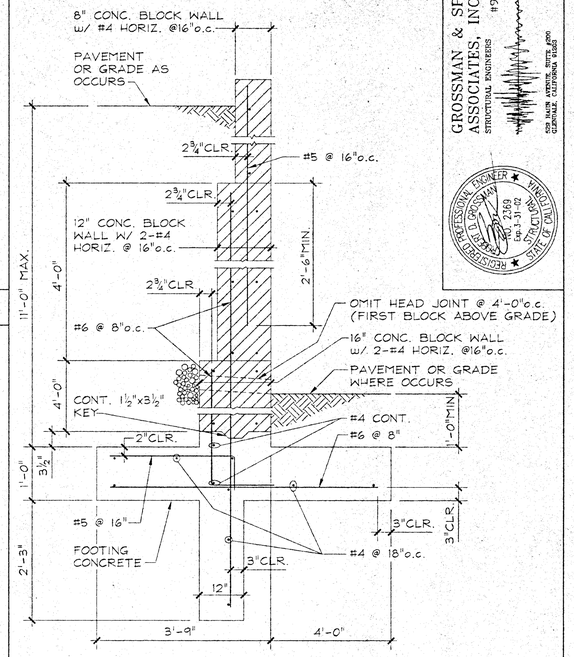

SECTION 10

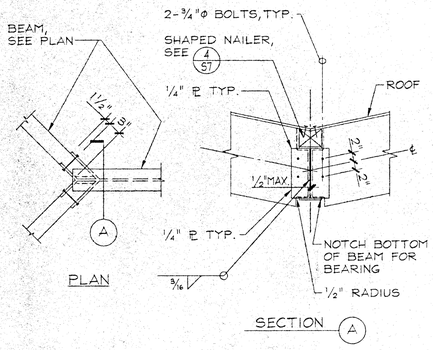

SECTION 4

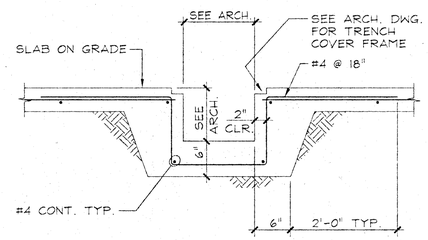

SECTION 5

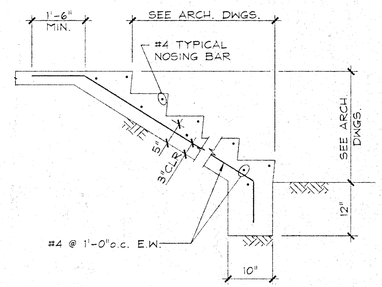

TYP. STAIR ON GRADE 6

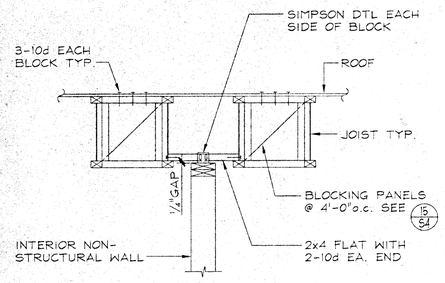

TYP. NON-BEARING WALL 7

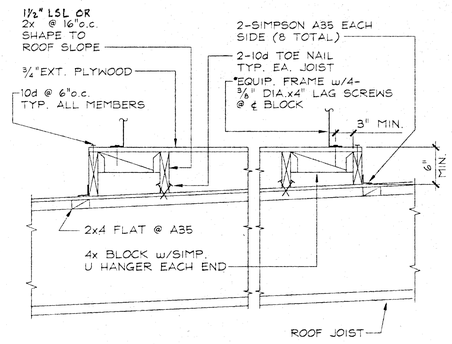

ROOF PLATFORM 8

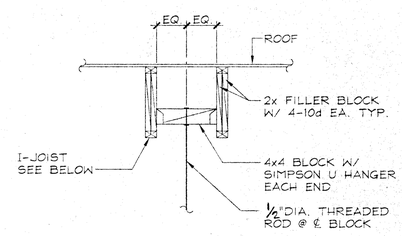

NOTES:
1. SEE ARCH. DWG. FOR DUCT BRACING TO WALL.

TYP. DUCT HANGER DETAIL 9

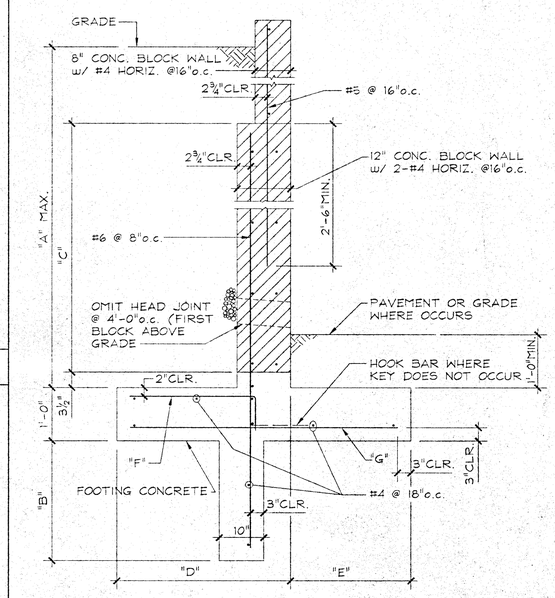

SCHEDULE						
A	B	C	D	E	F	G
11'-0"	2'-0"	5'-4"	3'-0"	3'-3"	#5 @ 16"	#6 @ 8"
7'-0"	1'-0"	2'-8"	2'-6"	2'-9"	#5 @ 16"	#5 @ 8"
4'-0"	0'-0"	0'-0"	1'-9"	1'-0"	NOT REQ'D.	#5 @ 16"

SECTION 14

GROSSMAN & SPEER ASSOCIATES, INC.
STRUCTURAL ENGINEERS #99027
REGISTERED PROFESSIONAL ENGINEER
STATE OF CALIFORNIA

CARMICHAEL-KEMP ARCHITECTS
2670 LOS FELIZ PLACE • LOS ANGELES • 666-2165

TAMARA L. SCHAEFFER
C 20592
REGISTERED PROFESSIONAL ENGINEER
STATE OF CALIFORNIA

IDENTIFICATION STAMP
DIV. OF THE STATE ARCHITECT
OFFICE OF REGULATION SERVICES
APPL. NO. 4-101516
AC. — FLS. SSS
DATE — DEC 14 1999

NEW SCIENCE BUILDING at MT. MIGUEL HIGH SCHOOL
1800 Sweetwater Road, Spring Valley, CA 91977
GROSSMONT UNION HIGH SCHOOL DISTRICT

SECTIONS AND DETAILS

JOB NO. 9822-1
DATE 12-14-99
SHEET NUMBER
S-10
BINDING ORDER 58 OF 82

DRAWING NAME: 99027S10.DWG

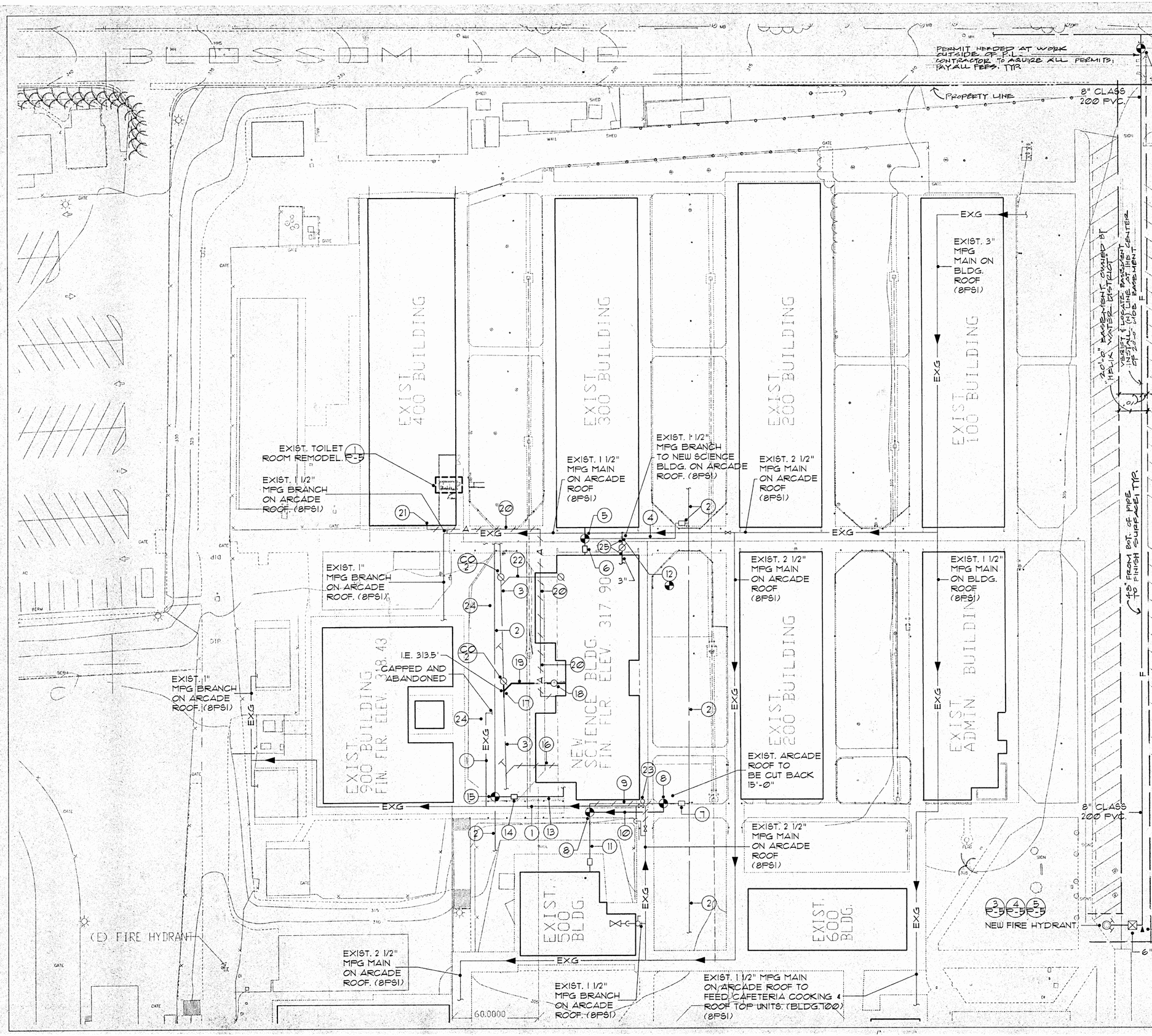

CONTRACTOR TO CO-ORDINATE SCHED. OF CONSTRUCTION. P.O.C. CONNECT NEW 8" C.W. TO EXIST. 8" C.W. (HOT TAP TO MAIN BY HELIX WATER DISTRICT.) HELIX WAD. TO TAP & INSTALL 8" G.V. CONTRACTOR TO CONNECT, SET GATE WELL & BACKFILL, COMPACT TRENCH, AND MAKE NECESSARY PAVEMENT REPAIRS.

INSTALLATION NOTES: (FOR THIS SHEET ONLY)

1. EXIST. 1" M.P.G. (8 P.S.I.) TO REMAIN.
2. EXIST. 3" (TRANSITE) C.W. MAIN TO REMAIN - INSTALL NEW 2" BALL VALVE IN VALVE BOX.
3. EXIST. 4" SANITARY SEWER TO REMAIN.
4. EXIST. 2½" COPPER C.W. LINE TO REMAIN.
5. EXIST. C.W. MAIN TO BLDG. 300 TO REMAIN.
6. REMOVE EXIST. 2" C.W. AND VALVE FROM UNDER NEW SCIENCE BLDG. CAP OFF PIPING.
7. EXIST. VALVE BOX TO REMAIN. INSTALL NEW 2" G.V.
8. P.O.C. CONN. NEW 2" C.W. TO EXIST. 2" C.W.
9. REMOVE EXIST. 2" C.W. FROM UNDER NEW BUILDING CONSTRUCTION.
10. NEW 2" C.W.
11. EXIST. 2" C.W. TO REMAIN.
12. P.O.C. NEW 1" M.P.G. (8 P.S.I.) TO EXIST. 1 1/2" M.P.G. ON ARCADE ROOF
13. NEW 2" C.W. TO BLDG.
14. NEW 2" G.V. IN C.Y.B.
15. P.O.C. NEW 2" C.W. TO EXIST. 3" C.W.
16. REMOVE AND CAP EXIST. 4" ACID RESTANT. C.I. FROM UNDER NEW BLDG.
17. P.O.C. NEW 4" A.W. TO EXIST. 4" VCP. I.E. 313.5' VERIFY IN FIELD.
18. NEW SAMPLE BOX.
19. NEW 4" ACID WASTE LINE.
20. REMOVE EXIST. AIR LINE FROM NEW BUILDING CONSTRUCTION.
21. CAP 1" A. ON INSIDE FACE OF EXTERIOR BLDG. WALL.
22. REMOVE AND CAP - OFF EXISTING 4" WASTE LINE FROM UNDER NEW CONSTRUCTION.
23. REMOVE EXISTING 2½" M.P.G. AND EXIST. 1" M.P.G. TO ACCOMMODATE ARCADE ALTERATION. TERMINATE EXISTING 2½" M.P.G. WITH PLUG COCK AT END OF NEW ARCADE ROOF. INSTALL NEW 1" M.P.G. AND DROP DOWN TO BELOW GRADE, RECONNECT 1" M.P.G. TO EXISTING 1" M.P.G. BELOW GRADE.
24. REMOVE AND CAP EXISTING C.W., GAS AND SEWER TO EXISTING PORTABLE CLASSROOMS TO BE REMODELED. COORDINATE WITH DISTRICT IN FIELD.
25. INSTALL NEW GAS PRESSURE REGULATOR ON ARCADE ROOF (1323 CFH) CAPACITY 8 TO 5 P.S.I. INLET PRESSURE. 8" OUTLET PRESSURE. INSTALL SEISMIC LOOP IN GAS SUPPLY.

REGISTERED PROFESSIONAL ENGINEER TOM NASROLLAH M 22307 MECHANICAL STATE OF CALIFORNIA

PLUMBING SITE PLAN

CARMICHAEL-KEMP ARCHITECTS A.I.A.
2070 LOS FELIZ PLACE • LOS ANGELES • 90027 • 323-664-1285

IDENTIFICATION STAMP DIV. OF THE STATE ARCHITECT OFFICE OF REGULATION SERVICES
APPL. NO. 4-101516
AC. FLS. SS
DATE DEC. 14 1999

NEW SCIENCE BUILDING at MT. MIGUEL HIGH SCHOOL
1800 Sweetwater Road, Spring Valley, CA 91977
GROSSMONT UNION HIGH SCHOOL DISTRICT

JOB NO.	9822-1
DATE:	12-14-99
SHEET NUMBER	P-1
BINDING ORDER	59 OF 82

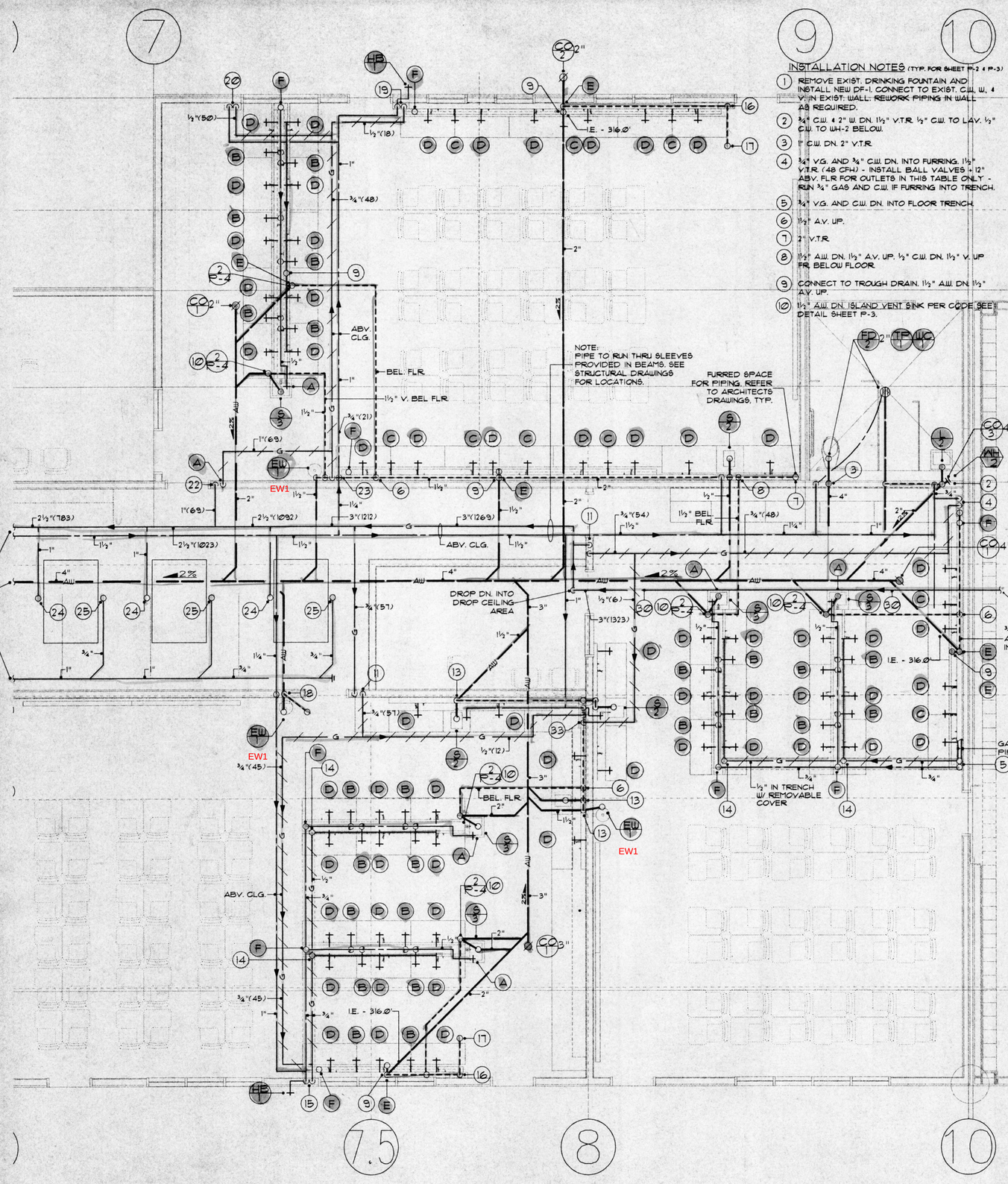

INSTALLATION NOTES (TYP. FOR SHEET P-2 & P-3)

1. REMOVE EXIST. DRINKING FOUNTAIN AND INSTALL NEW DF-1. CONNECT TO EXIST. C.W., W., & V. IN EXIST. WALL; REWORK PIPING IN WALL AS REQUIRED.
2. ¾" C.W. & 2" W. DN. 1½" V.T.R. ½" C.W. TO LAV. ½" C.W. TO WH-2 BELOW.
3. 1" C.W. DN. 2" V.T.R.
4. ¾" V.G. AND ¾" C.W. DN. INTO FURRING. 1½" V.T.R. (48 CFH) - INSTALL BALL VALVES + 12" ABV. FLR FOR OUTLETS IN THIS TABLE ONLY - RUN ¾" GAS AND C.W. IF FURRING INTO TRENCH.
5. ¾" V.G. AND C.W. DN. INTO FLOOR TRENCH.
6. 1½" A.V. UP.
7. 2" V.T.R.
8. 1½" A.W. DN. 1½" A.V. UP. ½" C.W. DN. 1½" V. UP FR. BELOW FLOOR.
9. CONNECT TO TROUGH DRAIN. 1½" A.W. DN. 1½" A.V. UP.
10. 1½" A.W. DN. ISLAND VENT SINK PER CODE. SEE DETAIL SHEET P-3.
11. ¾" GAS DN. TO ¾" BALL VALVE IN WALL BEHIND ACCESS PANEL + 5'-6". ¾" UP TO ABOVE CEILING.
12. ½" V.G. DN. 1" C.W. DN. 1½" TO EA. SINK. 1½" V.T.R. ½" V.G. DN. ¾" C.W. TO EW-1
13. 1½" A.W. DN. 1½" A.V. UP.
14. ½" G. & ¾" C.W. UP WITH BALL VALVES IN CABINET +12" ABV. FLR. ¾" C.W. UP TO VACUUM BREAKER AND DROP INTO CASEWORK.
15. ¾" V.G. AND C.W. DN. INTO TRENCH. ¾" C.W. AND ½" V.G. INTO CASE FURRING. ¾" C.W. TO HB-1.
16. 1½" A.V. UP TO ABOVE CEILING.
17. 1½" A.V.T.R.
18. ¾" C.W. DN. 2" A.V. DN. 1½" A.V. UP TO ABOVE CLG 1½" A.V.T.R.
19. ¾" C.W. & ½" V.G. DN. INTO FURRING. INSTALL ¾" BALL VALVES IN CASEWORK +12" A.F. ¾" C.W. TO HB-1.
20. ¾" V.G. DN. ¾" C.W. DN. INSTALL ¾" BALL VALVES IN CASEWORK +12" ABV. FLR.
21. ¾" C.W. DN. 1½" A.W. DN. 1½" A.V. UP. 1½" A.V.T.R.
22. 1" G. DN. TO 1" VALVE IN WALL BEHIND ACCESS PANEL + 5'-6". 1" GAS UP TO ABV. CLG.
23. 1½" A.W. DN. 1½" A.V. UP. 1½" A.V. UP FR. BELOW ½" V.G. DN. 1" C.W. DN. ¾" TO EW-1 & ¾" C.W. +12". V.G. TO B.V. IN CASEWORK +12" ABV. FLR.
24. 1" G. UP TO A/C UNIT ON ROOF WITH PLUG COCK AND UNION. (120 CFH)
25. CONNECT ¾" CONDENSATE DRAIN TO A/C UNIT ON ROOF WITH TRAP AND VENT.
26. ¾" C.W. DN. ½" TO LAV. ¾" TO HB-1. 1½" A.W. DN. 1½" A.V. UP.
27. 1½" A.V.T.R.
28. ½" V.G. DN. ¾" C.W. DN. INSTALL ¾" & ½" BALL VALVES IN CASEWORK +12" ABV. FLR.
29. 1" C.W. DN. ¾" TO EW-1 AND ¾" TO LAB TABLE. ½" V.G. DN. INSTALL ¾" AND ½" BALL VALVES IN CASEWORK +12" ABV. FLR.
30. DRILL THRU CENTER OF RAFTERS TO INSTALL GAS PIPE.
31. 1½" A.V. UP.
32. 2" A.V.T.R. IN FURRING. ½" C.W. AND ½" V.G. DN. INSTALL BALL VALVES IN CASEWORK. 12" ABV. FLOR.
33. (2) ½" V.G. DN. W/P.C. +12" ABV. FLR. IN CASEWORK. 2" A.V.T.R. ¾" C.W. DN. W/B.V. +12" IN CASEWORK EACH ROOM.
34. 2" A.W. DN. 1½" A.V.T.R. 1" C.W. DN. ¾" TO ES-1 AND EW-1
35. SAMPLING BOX. SEE DETAIL.
36. 1½" A.W. DN. 1½" A.V. UP IN FURRING. ¾" C.W. DN. TO EW-1
37. 1½" CONDENSATE DRAIN DN. SPILL OVER FS-1 1½" A.V.T.R. ½" G. DN. RUN TO OUTLETS AND FUME HOOD IN FURRING BEHIND COUNTER 1¼" C.W. DN. 1" TO WATER HEATER. ½" TO S-4. ½" TO S-1 AND FH-1. ½" H.W. FROM HTR. TO S-4, DW-1, AND S-1.
38. 1½" A.V.T.R. ¾" C.W. DN. ½" TO EA. S-2. ½" V.G. DN. RUN IN CABINET FURRING TO OUTLETS.
39. 1½" A.V. UP FROM BELOW.
40. 1½" A.V. DN. 1½" A.V. UP.
41. ¾" C.W. AND ¾" V.G. DN. INTO TRENCH WITH BALL VALVES BEHIND ACCESS PANEL + 5'-6" ABV. FLR. RUN ½" C.W. & V.G. INTO CASEWORK WITH BALL VALVE + 12" AF.
42. 1" C.W. DN. ¾" TO HB-1. ¾" DN. WITH BALL VALVE AND ACCESS PANEL +12" A.F. ¾" G. DN. WITH BALL VALVE AND ACCESS PANEL +12".
43. 1½" A.V. UP TO ABV. CLG. OFFSET THRU ROOF. ½" V.G. DN. ¾" C.W. DN. INSTALL ½" AND ¾" BALL VALVE IN CABINET +12" ABV. FLR.
44. 2" C.W. AND 3" G. UP TO ABV. CLG. IN FURRING.
45. 1" M.P.G. UP TO GAS PRESSURE REGULATOR ON WALL WITH LINE SIZE PLUG COCK. REGULATOR CAPACITY (130 CFH) @ 4 TO 5 P.S.I. INLET 8-WC OUTLET. SECURE TO WALL.

GAS LOAD IN CFH:

SPACE HTG.	840 CFH
LAB.	483 CFH
TOTAL	1323 CFH

SIZED ON 250' RUN

46. 2" C.W. UP TO 2" REDUCED PRESSURE BACK FLOW PREVENTER ON WALL + 24" ABV. GRD. INSTALL GATE VALVES BOTH SIDES OF BACKFLOW PREVENTER.
47. INSTALL ½" & ¾" BALL VALVES IN ½" G. & ¾" C.W. LINES IN CASEWORK +12" ABV. FLOOR.

LAB FAUCET SIZING CHART

NO. OF OUTLETS	PIPE SIZE	
	COLD WATER	GAS
1-2	½"	½"
3-10	¾"	½"
11-20	1"	¾"

PLUMBING FLOOR PLAN – NORTH SECTION – FIN FLR. ELEV. 317.90'

1/4"=1'-0"

CARMICHAEL-KEMP ARCHITECTS A.I.A.
2370 LOS FELIZ PLACE • LOS ANGELES • (323) 666-1205

DIV. IDENTIFICATION STAMP
DSA-SS/CC
OFFICE OF REGULATION SERVICES
APPL NO 4-101516
AC FLS SS
DATE DEC 1 1999

NEW SCIENCE BUILDING at MT. MIGUEL HIGH SCHOOL
1800 Sweetwater Road, Spring Valley, CA 91977
GROSSMONT UNION HIGH SCHOOL DISTRICT

PLUMBING FLOOR PLAN - NORTH SECTION

JOB NO. 9822-1
DATE: 12-14-99
SHEET NUMBER
P-2
BINDING ORDER 60 OF 82

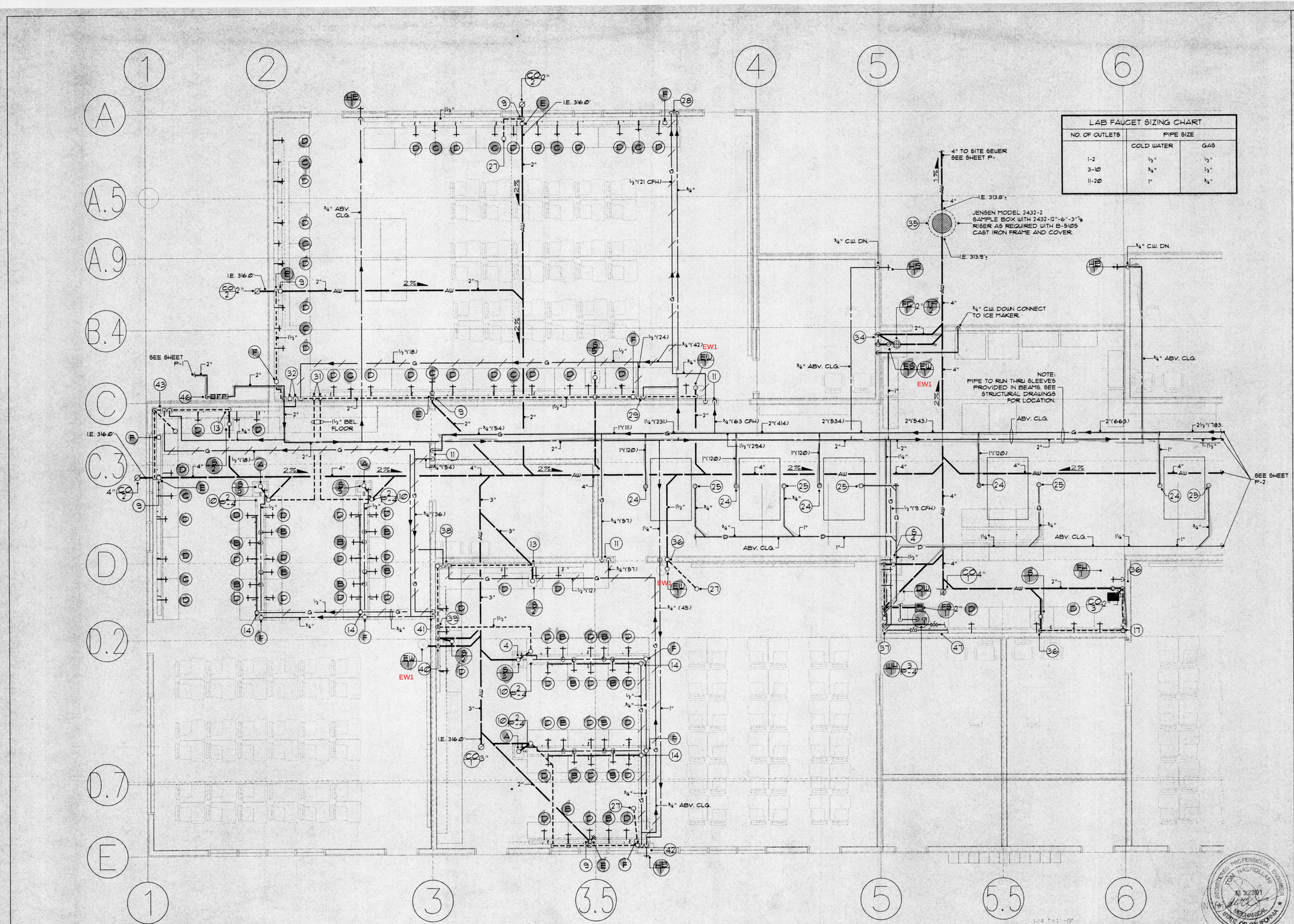

LAB FAUCET SIZING CHART		
NO. OF OUTLETS	PIPE SIZE	
	COLD WATER	GAS
1-2	½"	½"
3-10	¾"	½"
11-20	1"	¾"

PLUMBING FLOOR PLAN – FIN FLR. ELEV. 317.90'

1/4"=1'-0"

PLUMBING FLOOR PLAN - SOUTH SECTION

CARMICHAEL-KEMP ARCHITECTS A.I.A.
24976 LOS FELIZ PLACE ◇ LOS ANGELES ◇ 90024 ◇ 310-364-1205

IDENTIFICATION STAMP
DIV. OF THE STATE ARCHITECT
OFFICE OF REGULATION SERVICES
APPL. NO 4-101516
AC FLS. SS
DATE DEC 14 1999

NEW SCIENCE BUILDING at MT. MIGUEL HIGH SCHOOL
1800 Sweetwater Road, Spring Valley, CA 91977
GROSSMONT UNION HIGH SCHOOL DISTRICT

JOB NO. 9822-1
DATE: 12-14-99
SHEET NUMBER
P-3
BINDING ORDER 61 of 82

PLUMBING FIXTURE CONNECTION SCHEDULE

SYM.	DESCRIPTION	MNFG'R	MODEL	W	TRAP	V	CW	HW	REMARKS/SPECIFICATIONS
WC 1	WATER CLOSET (HANDICAPPED)	AMERICAN STANDARD	CADET 3043.102	4"	INT.	2"	1"	-	WITH SLOAN 111 FLUSH VALVE, CHURCH 9500 WASTE OPEN FRONT SEAT AND BOLT CAPS AND TRAP PRIMER TP-1.
L 1	LAVATORY	AMERICAN STANDARD	LUCERNE 0355.012	2"	1 1/4" x 1 1/2"	1 1/2"	1/2"	-	WITH LOOSE KEY STOP AND SUPPLY. J.R. SMITH CARRIER CHICAGO 433-665 FAUCET. MOUNTED ON RITE-REAR OF LAV. AND CHICAGO 327 STRAINER AND TRAP.
L 2	LAVATORY (HANDICAPPED)	AMERICAN STANDARD	LUCERNE 0355.012	2"	1 1/4" x 1 1/2"	1 1/2"	1/2"	1/2"	WITH LOOSE KEY STOP AND SUPPLY. J.R. SMITH CARRIER CHICAGO 802A-665 FAUCET. CHICAGO 327 STRAINER AND TRAP AND HANDICAPPED WRAP ON TRAP AND SUPPLY.
FD 1	FLOOR DRAIN	J.R. SMITH	2210-NB-PB	2"	2"	1 1/2"	-	-	WITH NICKEL BRONZE FINISH AND SEDIMENT BUCKET.
FD 2	FLOOR DRAIN	J.R. SMITH	2005-A-PB	2"	2"	1 1/2"	-	-	WITH NICKEL BRONZE FINISH.
FS 1	FLOOR SINK	J.R. SMITH	3100-91	2"	2"	1 1/2"	-	-	WITH ENAMELED CAST IRON HALF GRATE.
EW 1	EYE WASH	HAWS	7360BT	2"	1 1/2"	1 1/2"	3/4"	-	WITH 9101 DUST COVER.
ES 1	EMERGENCY SHOWER	HAWS	8133H	-	-	-	1"	-	ALL STAINLESS STEEL.
HB 1	HOSE BIBB	ZURN	1320-6	-	-	-	3/4"	-	WITH INTERNAL VACUUM BREAKER AND BRONZE FINISH.
S 1	WORK SINK	N.I.P.C	ROUGH-IN TRIM AND FINAL CONNECTION	1 1/2"	1 1/2"	1 1/2"	1/2"	1/2"	WITH SUPPLIES , STOPS, ENFIELD W-311 BLACK OUTLET, W-501 TRAP AND CHICAGO 930-VR-ETE-18 FAUCET.
S 2	LAB SINK	N.I.P.C	ROUGH-IN TRIM AND FINAL CONNECTION	1 1/2"	1 1/2"	1 1/2"	1/2"	-	WITH SUPPLIES , STOPS, ENFIELD W-311 BLACK OUTLET, W-501 TRAP AND CHICAGO 928-VR-ETE-18 FAUCET.
S 3	ISLAND SINK	N.I.P.C	ROUGH-IN TRIM AND FINAL CONNECTION	1 1/2"	1 1/2"	1 1/2"	1/2"	-	WITH ENFIELD W-311 BLACK OUTLET AND W-501 TRAP ISLAND VENT PER CODE.
S 4	LAUNDRY SINK	FIAT	MODEL P-1 WITH LEGS	1 1/2"	1 1/2"	1 1/2"	1/2"	1/2"	WITH SUPPLIES, STOPS ENFIELD W-501 TRAP, CHICAGO MODEL 895-GNZBVB-ET-VR FAUCET AND 1 HOLE FOR AIR GAP FITTING FROM DISHWASHER.
CO 1	FLOOR CLEAN OUT	J.R. SMITH	4100NB	-	-	-	-	-	WITH NICKEL BRONZE COVER.
CO 2	FLOOR CLEAN OUT	J.R. SMITH	4020-C1	-	-	-	-	-	WITH HEAVY WEIGHT CAST IRON COVER.
CO 3	WALL CLEAN OUT	J.R. SMITH	4472-PB	-	-	-	-	-	POLISHED BRONZE COVER.
DW 1	DISH WASHER	N.I.P.C	ROUGH-IN TRIM AND FINAL CONNECTION	1"	-	-	-	1/2"	RUN 1" DRAIN TO S-4 WITH AIR GAP FITTING.
WH 1	WATER HEATER	A.O. SMITH	DSE-20	-	-	-	1"	1"	WITH 20 GALLON STORAGE AND (2) 3K.W. 208V. 1ø ELEMENTS.
WH 2	WATER HEATER	HOT AQUA	35-208	-	-	-	3/4"	1/2"	WITH 3.5K.W., 208V., 1ø ELEMENTS LOCATE BELOW LAVATORY WITH MOUNTING BRACKETS.
A	LAB FITTING	CHICAGO	938-CWVP E-12	-	-	-	3/8"	-	
B	LAB FITTING	CHICAGO	937-986VPCW E-7 & E-18	-	-	-	3/8"	-	DELIVER E-18 TO OWNER - ONE FOR EACH FAUCET SPECIFIED
C	LAB FITTING	CHICAGO	954-986VPCW E-7 & E-18	-	-	-	3/8"	-	DELIVER E-18 TO OWNER - ONE FOR EACH FAUCET SPECIFIED
D	LAB FITTING	CHICAGO	909-C-VP986	-	-	-	-	-	3/8" GAS.
E	TROUGH DRAIN	ENFIELD	W-311 BLK W-501	1 1/2"	1 1/2"	1 1/2"	-	-	
F	VACUUM BREAKER	CHICAGO	892	-	-	-	3/4"	-	MOUNT ON TOP OF DEMO. TABLE. ALL EXPOSED WATER PIPING TO BE CHROME PLATED.
DF 1	DRINKING FOUNTAIN	HAWS	1441 6710	2"	1 1/2"	1 1/2"	3/4"	-	REPLACE EXIST. WITH MOUNTING BRACKET.
TP 1	TRAP PRIMER	SLOAN	F-72-A1	-	-	-	-	1/2"	1\2" C.W. TO FLOOR DRAIN.
TP 2	TRAP PRIMER	J.R. SMITH	2669	-	-	-	1/2"	-	RUN 1\2" C.W. FROM PRIMER TO FLOOR DRAIN.
FH 1	FUME HOOD	N.I.P.C.	ROUGH-IN TRIM AND FINAL CONNECTION	1 1/2"	1 1/2"	1 1/2"	1/2"	-	WITH ENFIELD W-501 TRAP, W-311 BLACK OUTLET AND VACUUM BREAKER FAUCET.

PLUMBING LEGEND

SYMBOL	ABBREV.	DESCRIPTION	ABBREV.	DESCRIPTION
	CW	COLD WATER LINE	A.P.	ACCESS PANEL
	HW	HOT WATER LINE	BEL.	BELOW
	HWR	HOT WATER RETURN	C.I.	CAST IRON
CD	D	CONDENSATE DRAIN LINE	CONC.	CONCRETE
G	G	GAS LINE (8" W.C.)	CONN.	CONNECT
AV	AV	ACID VENT PIPING	CLG.	CEILING
	V	VENT LINE	DN.	DOWN
	W	SOIL OR WASTE BELOW FLOOR OR GRADE	DWG.	DRAWING
	W	SOIL OR WASTE ABOVE FLOOR	EXIST.	EXISTING
F	F	FIRE SPRINKLER MAIN BY AUTO FIRE SPRINKLER CONTRACTOR	FIN.FLR.	FINISHED FLOOR
	GV/SOV	GATE VALVE/SHUT OFF VALVE	FLR.	FLOOR
	CV	CHECK VALVE	F. U.	FIXTURE UNIT
	FS NO GRATE	FLOOR SINK	G.P.M.	GALLONS PER MINUTE
	FS 1/2 GRATE	FLOOR SINK	HDR.	HEADER
	FD	FLOOR DRAIN	HTR.	HEATER
	FCO OR SCO	FLOOR OR SURFACE CLEANOUT	I.E.	INVERT ELEVATION
	WCO	WALL CLEANOUT	N.I.P.C.	NOT IN PLUMBING CONTRACT
	HB	HOSE BIBB	P.O.C.	POINT OF CONNECTION
	U	UNION	P.R.V.	PRESSURE REDUCING VALVE
	P&T	PRESS. & TEMP. RELIEF VALVE	P.V.C.	POLYVINYLCHLORIDE
	PC-S.O.C.	PLUG COCK-SHUT OFF COCK	RECT.	RECTANGULAR
	BAC. V.	BALANCING VALVE	REQ'D	REQUIRED
	SVYB	SHUT OFF VALVE IN YARD BOX	V.C.P	VITRIFIED CLAY PIPE
ICW	ICW	INDUSTRIAL COLD WATER	V.T.R.	VENT THRU ROOF
	T.B.	THRUST BLOCK	Y.B.	YARD BOX
	B.T.U.	BRITISH THERMAL UNIT	B.F.P.	BACKFLOW PREVENTER
MPG	M.P.G.	MEDIUM PRESSURE GAS-5 P.S.I.	RP	REDUCED PRESSURE
	AW	ACID WASTE PIPING	ABV.	ABOVE
	AVTR	ACID VENT THRU ROOF	W/	WITH
	RD ,OD OR CD	ROOF , OVERFLOW OR CANOPY DRAIN	CO.	CLEANOUT
CD	CD	CONDENSATE DRAIN		BALL VALVE
BV	BV	INLINE BALL VALVE	G(N)	GAS NEW
XHW	XHW	EXISTING HOT WATER	G(E)	GAS EXISTING
XHWR	XHWR	EXISTING HOT WATER RETURN	W(E)	WATER EXISTING
VG	VG	VALUED GAS LINE	W.C.	WATER COLUMN
XWM	XWM	WATER MAIN EXISTING	SOC	SHUTOFF COCK
XSM	XSM	SEWER MAIN EXISTING	CFH	CUBIC FEET PER HOUR
XCW	XCW	EXISTING COLD WATER	PSI	POUNDS PER SQUARE INCH
XG	XG	EXISTING GAS	FT	FEET-FOOT
XW	XW	EXISTING SOIL OR WASTE	GD	GARBAGE DISPOSAL
XSD	XSD	EXISTING STORM DRAIN	MISC.	MISCELLANEOUS
X X		EXISTING TO BE ABANDONED	MU	MAKE-UP AIR UNIT
AW	AW	ACID WASTE PIPING	A/C	AIR CONDITIONING
		EXISTING TO BE REMOVED	H & CW	HOT & COLD WATER
	P.O.C.	POINT OF CONNECTION	F.A.U.	FORCED AIR UNIT

GENERAL NOTES:
1. REFER TO ARCHITECTS PLANS, SECTIONS, ELEVATIONS AND DETAILS FOR EXACT LOCATIONS OF ROOM GAS SHUT-OFF VALVES AND ACROSS PANELS AND WATER AND GAS SHUT-OFFS WITH ACCESS PANELS TO WORK BENCHES.

2. REFER TO ARCHITETCS PLANS FOR FLOOR TRENCHES BETWEEN WORK BENCHES.

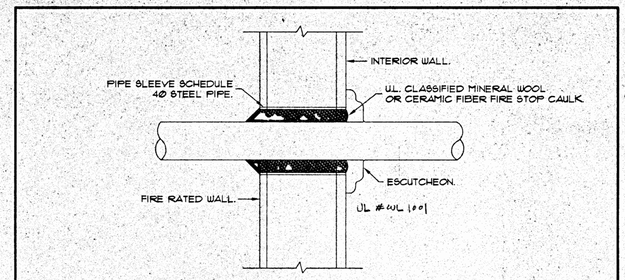

NOTES:
1. PUTTY SHALL BE INSTALLED NO THINNER TAN 3/4" & A MINIMUM OF 1/2" SURROUNDING THE PIPE. (BARE PIPE)
2. FOR INSULATED PIPES, USE FIRE STOP PUTTY FOR ITS ENTIRE WIDTH OF PIPE PENETRATION THRU WALL.
3. ALL PIPE PENETRATIONS THRU RATED WALLS, FLOORS & CEILING SHALL BE FIRE STOP WITH NELSON TYPE CLK FIRE STOP CAULK & NELSON TYPE FSP FIRE STOP PUTTY OR EQUAL.
4. FOR GAS SERVICES EXTEND SLEEVE 1" PAST INSIDE FACE OF WALL & 4" PAST OUTSIDE FACE OF WALL.
5. SEE STRUCTURAL DWGS FOR ADDITIONAL REQUIREMENTS.

FIRE RATED WALL PENETRATION DETAIL
SCALE: NONE
4 / P-4

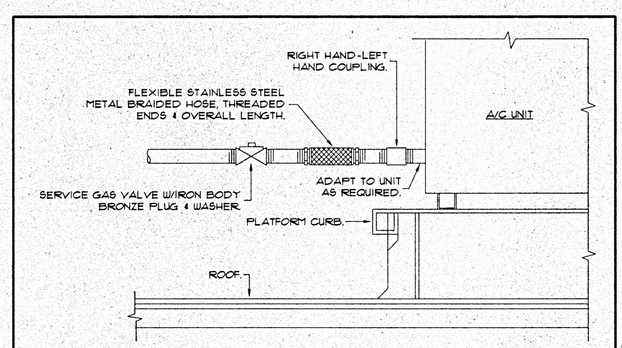

GAS CONNECTION TO A/C UNITS DETAIL
SCALE: NONE
5 / P-4

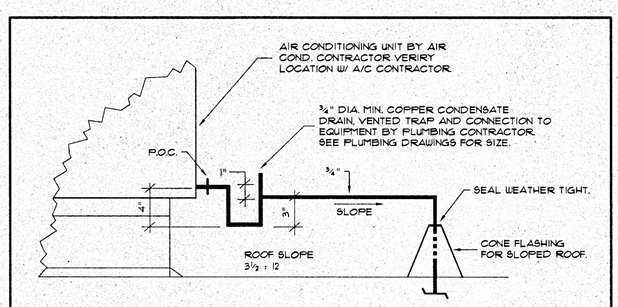

CONDENSATE DRAIN DETAIL
SCALE: NONE
6 / P-4

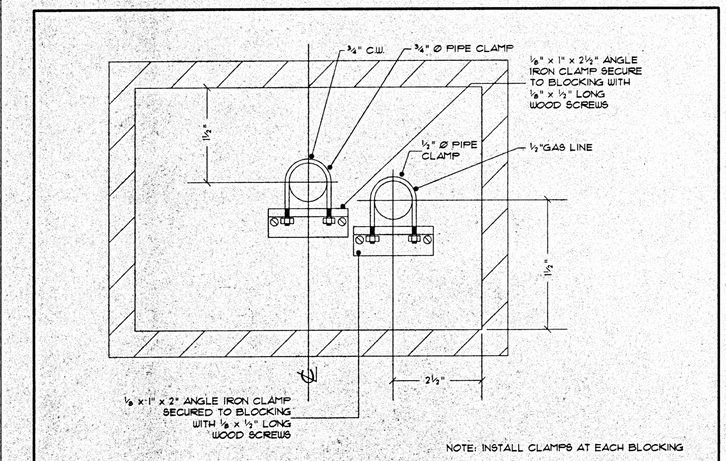

PIPE SUPPORT IN ISLAND WORK BENCHES
SCALE: NONE
1 / P-4

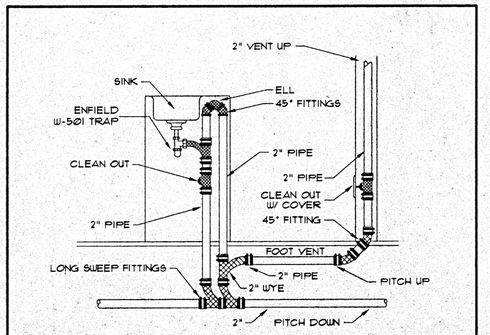

RAISE RETURN VENT AS HIGH AS POSSIBLE UNDER THE DRAIN BOARD USE 2(45°) FITTINGS AND ONE LONG RADIUS ELBOW TO MAKE LOOP. INSTALL LONG SWEEP FITTING BELOW FLOOR AND RUN HORIZONTALLY TO NEAREST PARTITION. USE 45° FITTINGS FOR EASY STOPPAGE CLEANING.

ISLAND SINK INSTALLATION
SCALE: NONE
2 / P-4

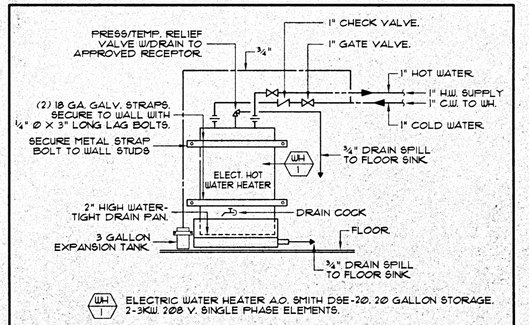

WATER HEATER DETAIL
SCALE: NONE
3 / P-4

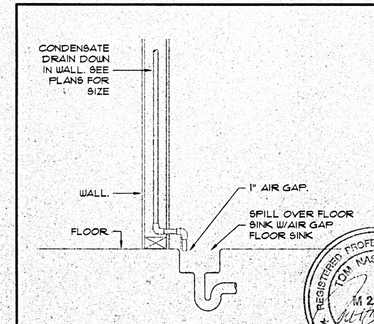

CONDENSATE TO FLOOR SINK DETAIL
SCALE: NONE

REGISTERED PROFESSIONAL ENGINEER TOM MASTOLLAN M 22103 MECHANICAL STATE OF CALIFORNIA

PLUMBING LEGEND, SCHEDULE, NOTES, AND DETAILS

NEW SCIENCE BUILDING at MT. MIGUEL HIGH SCHOOL
1800 Sweetwater Road, Spring Valley, CA 91977
GROSSMONT UNION HIGH SCHOOL DISTRICT

CARMICHAEL-KEMP ARCHITECTS A.I.A.
2170 LOS FELIZ PLACE • LOS ANGELES • (323) 666-1265

LICENSED ARCHITECT JAMES A. SCHEFFER NO. 8696 STATE OF CALIFORNIA

IDENTIFICATION STAMP OFFICE OF THE STATE ARCHITECT DIVISION OF REGULATION SERVICES
APPL NO. 4-101516
AC FLS
DATE DEC 14 1999

JOB NO. 9822-1
DATE: 12-14-99
SHEET NUMBER
P-4
BINDING ORDER 62 OF 82

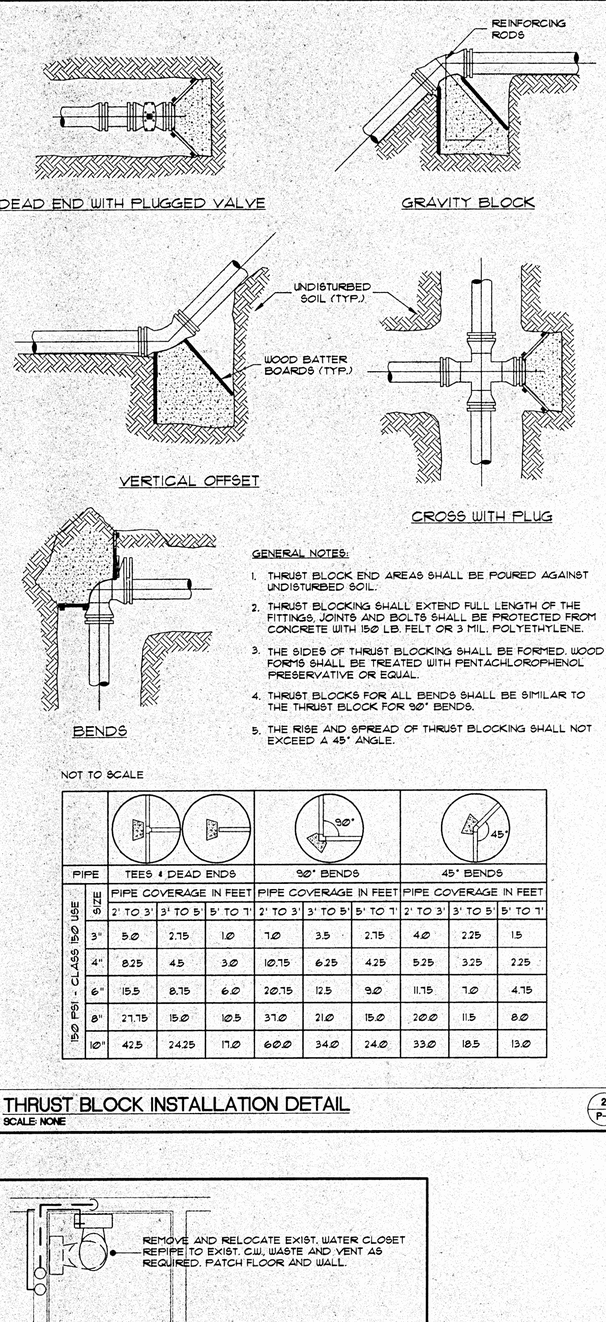

GENERAL NOTES:

1. THRUST BLOCK END AREAS SHALL BE POURED AGAINST UNDISTURBED SOIL.
2. THRUST BLOCKING SHALL EXTEND FULL LENGTH OF THE FITTINGS, JOINTS AND BOLTS SHALL BE PROTECTED FROM CONCRETE WITH 150 LB. FELT OR 3 MIL. POLYETHYLENE.
3. THE SIDES OF THRUST BLOCKING SHALL BE FORMED. WOOD FORMS SHALL BE TREATED WITH PENTACHLOROPHENOL PRESERVATIVE OR EQUAL.
4. THRUST BLOCKS FOR ALL BENDS SHALL BE SIMILAR TO THE THRUST BLOCK FOR 90° BENDS.
5. THE RISE AND SPREAD OF THRUST BLOCKING SHALL NOT EXCEED A 45° ANGLE.

NOT TO SCALE

PIPE		TEES & DEAD ENDS			90° BENDS			45° BENDS		
150 PSI - CLASS 150 USE	SIZE	PIPE COVERAGE IN FEET			PIPE COVERAGE IN FEET			PIPE COVERAGE IN FEET		
		2' TO 3'	3' TO 5'	5' TO 7'	2' TO 3'	3' TO 5'	5' TO 7'	2' TO 3'	3' TO 5'	5' TO 7'
	3"	5.0	2.75	1.0	7.0	3.5	2.75	4.0	2.25	1.5
	4"	8.25	4.5	3.0	10.75	6.25	4.25	5.25	3.25	2.25
	6"	15.5	8.75	6.0	20.75	12.5	9.0	11.75	7.0	4.75
	8"	27.75	15.0	10.5	37.0	21.0	15.0	20.0	11.5	8.0
	10"	42.5	24.25	17.0	60.0	34.0	24.0	33.0	18.5	13.0

THRUST BLOCK INSTALLATION DETAIL
SCALE: NONE

(2 / P-5)

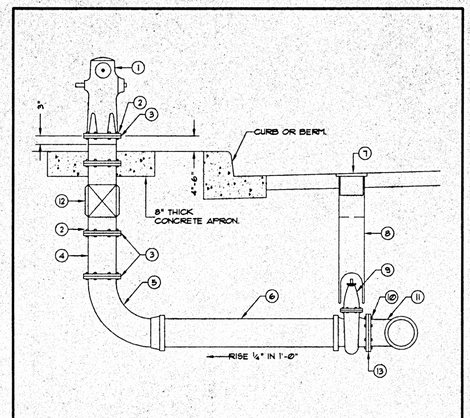

NOTES:

1. REQUIRED THRUST BLOCKS ARE NOT SHOWN FOR CLARITY.
2. REFER TO SECTION 11 OF THE SPECIFICATION FOR INFORMATION REGARDING ELEVATIONS.
3. REFER TO STANDARD DRAWINGS 13, 14, AND 15.

ITEM NO.	NO. REQ'D.	DESCRIPTION
1	1	6" FIRE HYDRANT.
2	VARIES	¾" X 3" ZINC-COATED HEX HEAD MACHINE NUTS AND BOLTS. (TYPICAL THROUGHOUT FIRE HYDRANT RISER)
3	VARIES	6" FIRE HYDRANT FLANGE GASKET. (TYPICAL)
4	1	6" X REQUIRED LENGTH SPOOL.
5	1	6" X 18" FLANGE X PUSH-ON BURY ELL.
6	1	6" X REQUIRED LENGTH OF PVC OR DUCTILE-IRON PIPE.
7	1	8" GATE WELL CAP WITH 6" SKIRT.
8	1	8" CLASS 200 PVC GATE WELL IN ONE OR TWO SECTION.
9	1	6" FLANGE X PUSH-ON GATE VALVE.
10	1	⅞" X 3" ZINC-COATED MACHINE NUTS AND BOLTS.
11	1	MAIN SIZE X 6" TEE WITH FLANGED OUTLET OR TAPPING SLEEVE.
12	1	FIRE HYDRANT BREAK-OFF CHECK VALVE. (ONLY WHEN REQUIRED BY ENGINEER)
13		6" FLANGE GASKET.

FIRE HYDRANT DETAIL
SCALE: NONE

(3 / P-5)

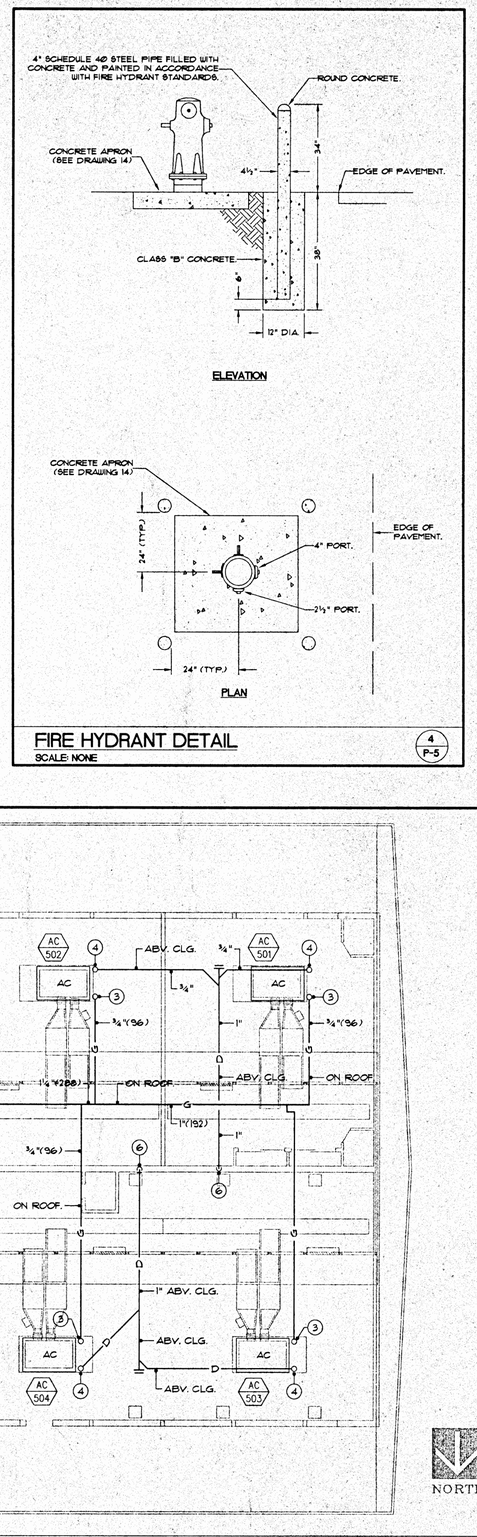

FIRE HYDRANT DETAIL
SCALE: NONE

(4 / P-5)

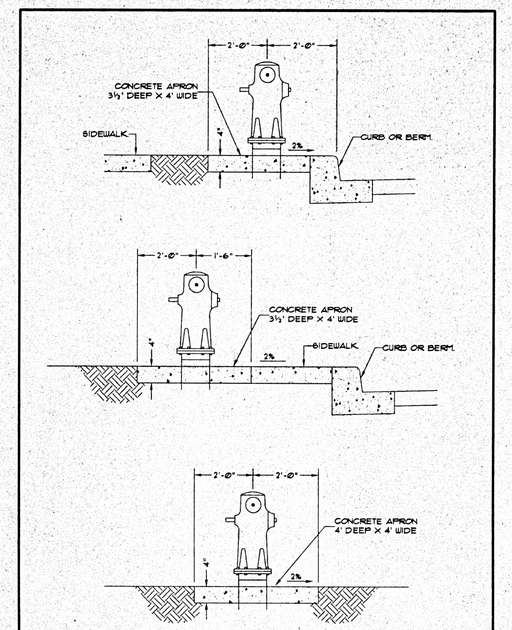

NOTES:

1. APRONS SHALL BE CLASS "A" CONCRETE, AND SHALL EXTEND TO BACK OF SIDEWALK OF CURB.
2. FIRE HYDRANT PROTECTION IN ACCORDANCE WITH STANDARD DRAWING 13 SHALL BE REQUIRED FOR HYDRANTS UNPROTECTED BY A VERTICAL-FACED CURB, OR AS SHOWN ON THE DRAWINGS, OR AS OTHERWISE DIRECTED BY THE ENGINEER.

FIRE HYDRANT DETAIL
SCALE: NONE

(5 / P-5)

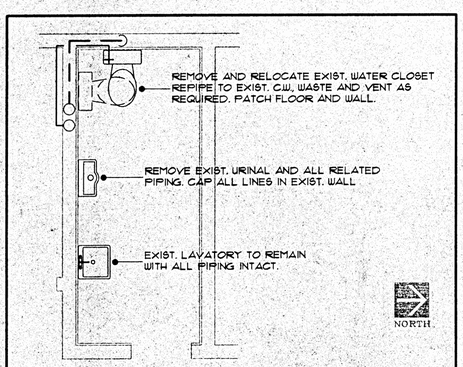

MEN'S ROOM - BLDG. 400
SCALE: NONE

(1 / P-5)

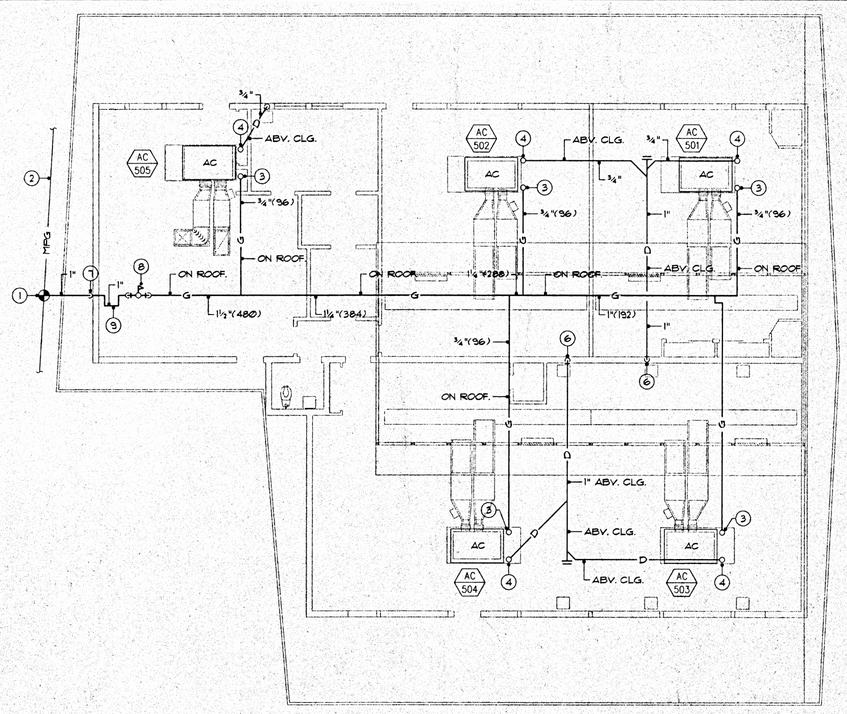

INSTALLATION OF GAS PIPE SUPPORT AND CLAMPING ON ROOF SHALL BE 4"X6"X8" LONG TREATED REDWOOD BLOCKS SECURED TO ROOF WITH ½" THICK ELASTIC PIPE SHALL BE CLAMPED TO BLOCKS 6'-0" O.C. AND AT EACH FITTING, RISER OR DROP.

1. POINT OF CONNECTION. CONNECT TO EXISTING 1½' PLUGGED TEE ON ARCADE ROOF WITH NEW 1" GAS.
2. EXISTING 2½" GAS ON ARCADE ROOF.
3. ¾" GAS UP A/C UNIT WITH PLUG COCK AND UNION. (96 CFH)
4. CONNECT TO A/C UNIT ON ROOF WITH TRAP AND VENT.
5. ¾" CONDENSATE DRAIN DOWN. CONNECT TO TAILPIECE ON EXISTING SINK.
6. 1" CONDENSATE DOWN CONNECT TO TAILPIECE ON EXISTING SINK.
7. SEISMIC JOINT ON ROOF AT POINT OF CONNECTION.
8. 1" M.P.G. UP TO NEW GAS PRESSURE REGULATOR ON ROOF. REGULATOR CAPACITY (480 CFH) 7 TO 5 P.S.I. INLET, 8" W.C. OUTLET 1½" GAS DOWN ONTO ROOF.
9. 1" SEISMIC JOINT.

REGISTERED PROFESSIONAL ENGINEER TOM NASROLLAH M 22301 MECHANICAL STATE OF CALIFORNIA

PLUMBING FLOOR PLAN - BUILDING 500
SCALE: 1/8" = 1'-0"

ENLARGE TOILET ROOM PLUMING PLAN - BLDG. 400 AND DTAILS

CARMICHAEL-KEMP ARCHITECTS A.I.A.
2170 LOS FELIZ PLACE • LOS ANGELES • CALIFORNIA • 90039 • (323) 664-1244

REGISTERED ARCHITECT JAMES V. SCHAFFER C 20592 EXPIRES SEPT. 30, 2000 STATE OF CALIFORNIA

IDENTIFICATION STAMP DIV. OF STATE ARCHITECT OFFICE OF REGULATION SERVICES
APPL NO 4-101516
AC PLS SS
DATE: DEC 1 4 1999

NEW SCIENCE BUILDING at MT. MIGUEL HIGH SCHOOL
1800 Sweetwater Road, Spring Valley, CA 91977
GROSSMONT UNION HIGH SCHOOL DISTRICT

JOB NO. 9822-1
DATE: 12-14-99
SHEET NUMBER
P-5
BINDING ORDER 63 of 82

ROOFTOP PACKAGED GAS HEATING/ELECTRIC COOLING UNIT SCHEDULE

SYMBOL	AREA SERVED	MFG.	MODEL NO.	NOM. TONS	TOTAL *13 COOLING MBTU/HR	SENS. *13 COOLING MBTU/HR	EER (SEER)	HEATING MBTU/HR IN	HEATING MBTU/HR OUT	EEF %	SUPPLY CFM	NUMBER PEOPLE	CFM / PERSON	OUTSIDE AIR CFM	EXT. S.P. INCHES	SUPPLY HP	VOLTS/ PHASE	MIN. CKT. AMPS	MOCP AMPS	WT. LBS	REMARKS:
AC-1	SCIENCE #1	TRANE	YCD074C3LC	6	72.0	54.3	10.0	120.0	97.0	81	2,400	30	20	600	1.0	2	208/230/3	38.1	50	1,129	*1*2*3*4*5*6
AC-2	SCIENCE #2	TRANE	YCD074C3LC	6	72.0	54.3	10.0	120.0	97.0	81	2,400	30	20	600	1.0	2	208/230/3	38.1	50	1,129	*1*2*3*4*5*6
AC-3	SCIENCE #3	TRANE	YCD074C3LC	6	72.0	54.3	10.0	120.0	97.0	81	2,400	30	20	600	1.0	2	208/230/3	38.1	50	1,129	*1*2*3*4*5*6
AC-4	SCIENCE #4	TRANE	YCD074C3LC	6	72.0	54.3	10.0	120.0	97.0	81	2,400	30	20	600	1.0	2	208/230/3	38.1	50	1,129	*1*2*3*4*5*6
AC-5	CHEMISTRY / PHYSICS	TRANE	YCD074C3LC	6	72.0	54.3	10.0	120.0	97.0	81	2,400	30	20	600	1.0	2	208/230/3	38.1	50	1,129	*1*2*3*4*5*6
AC-6	CHEMISTRY	TRANE	YCD074C3LC	6	72.0	54.3	10.0	120.0	97.0	81	2,400	30	20	600	1.0	2	208/230/3	38.1	50	1,129	*1*2*3*4*5*6
AC-7	PREP ROOM	TRANE	YCD074C3LC	6	72.0	54.3	10.0	120.0	97.0	81	2,400	30	20	600	1.0	2	208/230/3	38.1	50	1,129	*1*2*3*4*5*6
AC-501	CLASSROOM	TRANE	YCP042F3MBN	3.5	42.0	29.8	(12.0)	96.0	76.0	79	1,400	25	20	500	0.8	3/4	208/230/3	19.9	30	600	*2*5*7*8*9*10*11
AC-502	CLASSROOM	TRANE	YCP042F3MBN	3.5	42.0	29.8	(12.0)	96.0	76.0	79	1,400	25	20	500	0.8	3/4	208/230/3	19.9	30	600	*2*5*7*8*9*10*11
AC-503	HOME ECONOMICS 1	TRANE	YCP042F3MBN	3.5	42.0	29.8	(12.0)	96.0	76.0	79	1,400	20	20	400	0.8	3/4	208/230/3	19.9	30	600	*2*5*7*8*9*10*11
AC-504	HOME ECONOMICS 2	TRANE	YCP042F3MBN	3.5	42.0	29.8	(12.0)	96.0	76.0	79	1,400	20	20	400	0.8	3/4	208/230/3	19.9	30	600	*2*5*7*8*9*10*11
AC-505	COPY CENTER	TRANE	YCP048F3HBN	4	47.0	33.6	(12.0)	120.0	95.0	79	1,600	10	20	200	0.8	1	208/230/3	24.5	35	675	*2*5*7*8*9*10*11

MOCP = MAXIMUM OVERCURRENT PROTECTION.
COOLING CAPACITIES BASE ON CONDITIONS OF 95 DEGREES OUTSIDE DRY BULB AND 67 DEGREES WET BULB ENTERING AIR TO COIL.
*1 PROVIDE A MASON ISC FACTORY ONE PIECE ROOF CURB WITH 2" SPRING VIBRATION ISOLATION AND INTEGRAL SIESMIC RESTRAINT AND DUCT SUPPORTS. PROVIDE PITCHED ROOF PLATFORM PER ARCHITECTURAL/STRUCTURAL DETAILS.
*2 PROVIDE 1 INCH THICK LINED SUPPLY AND RETURN PLENUMS WITH FLEXIBLE CONNECTION TO UNIT.
*3 PROVIDE A FULL MODULATING FACTORY ECONOMIZER WITH ENTHALPY CONTROL.
*4 PROVIDE SMOKE DETECTORS IN SUPPLY AND RETURN PLENUMS AND INTERLOCK WITH FIRE ALARM SYSTEM AND HVAC UNIT CONTROLS.
*5 PROVIDE FARR 30/30 2 INCH THICK FILTERS.
*6 PROVIDE CONTROL CONDUIT, WIRE AND TRANE #BAYSEN019 7 DAY PROGRAMMABLE ELECTRONIC THERMOSTAT.
*7 PROVIDE A PITCHED ROOF PLATFORM PER ARCHITECTURAL DETAILS
*8 PROVIDE A LARGE OUTSIDE AIR HOOD WITH MANUAL DAMPER.
*9 PROVIDE FOUR (4) MASON SLR SPRING VIBRATION ISOLATION MOUNTS WITH 2" DEFLECTION AND WELDED RESTRAINTS. INSTALL ONE MOUNT AT EACH CORNER OF UNIT WITH 10"x10"x1/4" GALV. SHT MTL. REINFORCING PLATE AT BASE RAILS AT EACH CORNER
*10 PROVIDE HIGH STATIC MOTOR ACCESSORY
*11 PROVIDE CONTROL CONDUIT, WIRE AND TRANE #TAYSTAT300C 7 DAY PROGRAMMABLE ELECTRONIC THERMOSTAT.
*12 AT ARI RATINGS (95 AT 80DB/67WB STANDARD CFM)

EXHAUST FAN SCHEDULE

SYMBOL	AREA SERVED	MFG.	MODEL NO.	CFM	EXT. S.P. INCHES	FAN MOTOR HP (WATTS)	RPM	ROOF OPENING	VOLTS/ PHASE	WT. LBS.	REMARKS:
EF-1	CLASSROOM EM. EXHAUST(S)	GREENHECK	SE1-16-428-A5	2,400	0.500	1/2	1,750	N/A	120/1	60	*1*4
EF-2	PREP ROOM EM. EXHAUST	GREENHECK	CUBE-160	2,400	0.500	1/2	1,045	18"x18"	120/1	150	*2*4
EF-3	FUME HOOD	GREENHECK	SWB-10-CW UB	800	0.750	1/2	1,448	12" DIA.	120/1	300	*3*4
EF-4	WOMENS 105	GREENHECK	SP-224	200	0.250	(83)	1,000	8" DIA.	120/1	30	*5
EF-5	STORAGE 117 / ELEC. RM. 116	GREENHECK	SP-216	100	0.250	(53)	1,100	6" DIA.	120/1	25	*6
EF-6	MENS AT BLDG 400	GREENHECK	G-65-G	91	0.250	1/60	1,300	11"x11"	120/1	50	*2*7

EXHAUST FAN SHALL NOT BE SUBMITTED WITH RPMS HIGHER THAN THOSE LISTED FOR THE SPECIFIC CFM.
*1 FAN TO BE SIDEWALL MOUNTED AT ROOF DORMERS. PROVIDE GREENHECK COMBINATION GRAVITY BACKDRAFT DAMPER / LOUVER WITH BIRD SCREEN AND WALL COLLAR.
*2 FAN TO BE ROOF MOUNTED. PROVIDE A FACTORY ONE PIECE PITCHED SOUND ATTENUATING ROOF CURB AND PROVIDE BACK DRAFT DAMPERS.
*3 FAN TO BE ROOF MOUNTED UP BLAST. PROVIDE DRAIN CONNECTION, FLANGED OUTLET, BELT GUARD, NEOPRENE ISOLATORS, AND "GREENKOTE" COATING
*4 CONTRACTOR TO PROVIDE VARIABLE SPEED WALL SWITCH FOR ON/OFF OPERATION AND SPEED CONTROL.
*5 FAN TO BE CEILING MOUNTED. PROVIDE WITH BACKDRAFT DAMPERS. FURNISH AND INSTALL DUCT FROM FAN THROUGH ROOF TO SELF-FLASHING T-CAP. FAN TO BE INTERLOCKED WITH LIGHTS.
*6 FAN TO BE CEILING MOUNTED. PROVIDE WITH BACKDRAFT DAMPERS. FURNISH AND INSTALL DUCT FROM FAN THROUGH ROOF TO SELF-FLASHING T-CAP. PROVIDE 'ON-RISE' THERMOSTAT WITH MANUAL OVERRIDE AND ALL WIRING TO CONTROL FAN. SET THERMOSTAT AT 80 DEG.
*7 FAN TO BE INTERLOCKED WITH ROOM LIGHTS.

INTAKE HOOD SCHEDULE

SYMBOL	AREA LOCATED	MFG.	MODEL NO.	MAX CFM	P.D. INCHES	OVERALL HOOD SIZE INCHES	OPENING THROUGH ROOF	CURB SIZE INCHES	WT. LBS	REMARKS:
GRV-16	ROOF	GREENHECK	GRS16	900	0.15	29" DIA.	18"x18"	24"x24"	50	*1*2*3

*1 PROVIDE ALL ALUMINUM CONSTRUCTION.
*2 PROVIDE A FACTORY ONE PIECE PITCHED SOUND ATTENUATING ROOF CURB.
*3 PROVIDE BIRDSCREEN.

DUCTLESS SPLIT SYSTEM FAN COIL UNIT SCHEDULE

SYMBOL	AREA SERVED	MFG.	MODEL NO.	NOM. TONS	COOLING MBTU/HR MBTU/HR	EER (SEER)	VOLTS/ PHASE	MIN. CKT. AMPS	MOCP AMPS	WT. LBS	REMARKS:
FC-1	ELECTRICAL ROOM	MITSUBISHI	PLL12FK	1	12.3	10.0	120/1	2	15.0	120	*1*2*3*4*5

MOCP = MAXIMUM OVERCURRENT PROTECTION.
COOLING CAPACITIES BASE ON CONDITIONS OF 95 DEGREES OUTSIDE DRY BULB AND 67 DEGREES WET BULB ENTERING AIR TO COIL.

*1 HANG UNIT FROM STRUCTURE ABOVE WITH (4) 1/4" THREADED RODS. LATERALLY BRACE TO CEILING FRAMING AT ALL FOUR CORNERS. SEE STRUCTURAL DRAWINGS FOR ATTACHMENT DETAILS.
*2 PROVIDE FACTORY 'INTELLIGENT' REMOTE CONTROLLER IN SPACE WITH WIRING (IN 3/4" CONDUIT) TO INDOOR AND OUTDOOR UNITS.
*3 PROVIDE DECORATIVE INDOOR GRILLE WITH 4-WAY THROW. PROVIDE 1" FILTERS.
*4 PROVIDE A REFRIGERATION PIPING LINE SET WITH SUCTION AND LIQUID COPPER TUBING. INSULATE SUCTION PIPING FROM FAN COIL TO CONDENSING UNIT. PROVIDE SHUT OFF VALVES AT FAN COIL UNIT. (REFER TO MANUFACTURER FOR PIPING SIZES.)

DUCTLESS SPLIT SYSTEM CONDENSING UNIT SCHEDULE

SYMBOL	AREA SERVED	MFG.	MODEL NO.	NOM. TONS	TOTAL COOLING MBTU/HR	EER (SEER)	VOLTS/ PHASE	MIN. CKT. AMPS	MOCP AMPS	WT. LBS	REMARKS:
CU-1	ELECTRICAL ROOM	MITSUBISHI	PUL12EK	1	12.3	10.0	208/1	11.0	15	200	*1*2*3*4

MOCP = MAXIMUM OVERCURRENT PROTECTION.
COOLING CAPACITIES BASE ON CONDITIONS OF 95 DEGREES OUTSIDE DRY BULB AND 67 DEGREES WET BULB ENTERING AIR TO COIL.
*1 UNIT IS TO BE MOUNTED ON (4) MASON SUPER W PADS ON BUILT UP 36"L x 16" W PLATFORM. (SEE ARCHITECTURAL DRAWINGS FOR PLATFORM.)
*2 PROVIDE SUCTION LINE FILTER AND ACCUMULATOR.
*3 PROVIDE CONDUIT AND WIRE FROM CONDENSING UNIT TO FAN COIL.
*4 PROVIDE A REFRIGERATION PIPING LINE SET WITH SUCTION AND LIQUID COPPER TUBING. INSULATE SUCTION PIPING FROM FAN COIL TO CONDENSING UNIT. PROVIDE SHUT OFF VALVES AT CONDENSING UNIT. (REFER TO MANUFACTURER FOR PIPING SIZES.)

ALL MECHANICAL AND ELECTRICAL EQUIPMENT SHALL BE BRACED OR ANCHORED TO RESIST A HORIZONTAL FORCE ACTING IN ANY DIRECTION USING THE FOLLOWING CRITERIA:

EQUIPMENT ON GRADE 23% OF OPERATING WEIGHT
EQUIPMENT ON STRUCTURE 35% OF OPERATING WEIGHT

FOR FLEXIBLY MOUNTED EQUIPMENT USE 4 x THE ABOVE VALUES AND FOR SIMULTANEOUS VERTICAL FORCE USE 1/3 X THE HORIZONTAL FORCE.

THE ABOVE VALUES ARE FOR AN IMPORTANCE FACTOR, I = 1.15 AND SEISMIC ZONE, Z = 0.4.

WHERE ANCHORAGE DETAILS ARE NOT SHOWN ON THE DRAWINGS THE FIELD INSTALLATION SHALL BE SUBJECT TO THE APPROVAL OF THE MECHANICAL ENGINEER AND THE FIELD ENGINEER OF THE OFFICE OF THE STATE ARCHITECT.

SMOKE DETECTION REQUIRED BY SECTION 608, CMC, SHALL BE A SMOKE DETECTOR COMPLYING WITH NFPA 72 WHICH WILL DETECT PRODUCTS OF COMBUSTION OTHER THAT HEAT, WHICH IS INSTALLED IN THE MAIN SUPPLY-AIR DUCT AHEAD OF ANY OUTSIDE AIR INLET, OR INSTALLED IN EACH ROOM OR SPACE SERVED BY THE SUPPLY-AIR DUCT. ACTIVATION OF ANY DETECTOR SHALL CAUSE THE AIR MOVING EQUIPMENT TO AUTOMATICALLY SHUT DOWN AND SHALL ACTIVATE THE FIRE ALARM SYSTEM.

HVAC LEGEND

SYMBOL	DESCRIPTION
	SIDEWALL MOUNT SUPPLY / RETURN GRILLE
	T-BAR/GYP. BD. CEILING MOUNT SUPPLY DIFFUSER
	T-BAR/GYP. BD. CEILING MOUNT RETURN GRILLE
	RIGID DUCT
	LINED DUCTWORK
	DUCT ELEVATION CHANGE
	DUCT PENETRATION THRU ROOF
	MANUAL VOLUME DAMPER
SD	SMOKE DETECTOR
F/SD	FIRE / SMOKE DAMPER
S	DDC SENSOR SEE DETAIL BELOW FOR MOUNTING HEIGHTS
	~~UNDERCUT DOOR~~
1/1	EQUIPMENT SYMBOL

ABBREVIATIONS

A.F.F.	ABOVE FINISHED FLOOR	DIF	DIFFUSER	O/R	ON ROOF
A.F.G.	ABOVE FINISHED GRADE	(E)	EXISTING TO REMAIN	P.O.C.	POINT OF CONNECTION
ABV.	ABOVE	ELEC.	ELECTRICAL	S.O.V.	SHUT OFF VALVE
A/C	ABOVE CEILING	ELEV.	ELEVATION	(R)	TO BE REMOVED
ARCH.	ARCHITECT(URAL)	FLR.	FLOOR	RTU	ROOFTOP UNIT
B/G	BELOW GRADE	FT.	FOOT OR FEET	TYP.	TYPICAL
BEL.	BELOW	MAX.	MAXIMUM	VTR	VENT THRU ROOF
B/G	BELOW GRADE	MFR.	MANUFACTURER	U/C	UNDERCUT DOOR
CLG.	CEILING	MIN.	MINIMUM	U/G	UNDER GROUND
D/L	DOOR LOUVER	OSA	OUTSIDE AIR	U/R	UP THRU ROOF

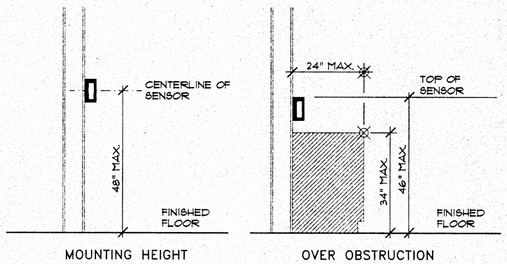

SENSOR MOUNTING HEIGHTS
SCALE: NONE

GENERAL NOTES:

1. ALL PRE-FORMED FILTER HAVING A COMBUSTIBLE FRAME SHALL BE TESTED AS A COMPLETE ASSEMBLY. ALL FILTERS IN ALL OCCUPANCIES SHALL BE CLASS II OR BETTER, AS SHOWN ON THE STATE FIRE MARSHAL LISTING. AIR FILTERS SHALL BE ACCESSIBLE FOR CLEANING OR REPLACEMENT.
2. ALL INSULATION AND DUCT LINER SHALL HAVE A CLASS I FIRE RATING WITH A FLAME-SPREAD INDEX OF NOT MORE THAN 25 AND A SMOKE-DEVELOPED RATING OF NOT MORE THAN 50.
3. ALL FLEXIBLE DUCT SHALL HAVE A CLASS I FIRE RATING WITH A FLAME-SPREAD INDEX OF NOT MORE THAN 25 AND A SMOKE-DEVELOPED RATING OF NOT MORE THAN 50.
4. SMOKE AND FIRE DAMPERS SHALL BE PROVIDED AS REQUIRED BY C.B.C. SECT 713.10 AND 713.11.
5. VERIFY ALL EXISTING CONDITIONS PRIOR TO SUBMITTING BIDS. NO ALLOWANCE SHALL BE GRANTED AFTER INITIAL BID SUBMISSIONS FOR CONTRACTORS' FAILURE TO FIELD VERIFY ALL EXISTING VERIFY ALL EXISTING CONDITIONS PRIOR TO SUBMITTING BIDS.
6. CONTRACTOR TO SUBMIT PLANS RESULTANT FROM CHANGES IN EXISTING CONDITIONS TO SCHOOL DISTRICT, ARCHITECT AND MECHANICAL ENGINEER FOR APPROVAL.
7. SEE SHEET S1.1 FOR HVAC SEISMIC DESIGN LOADS.
7. ANY TRANSMISSION FEATURE CROSSING A SEISMIC GAP SHALL HAVE A FLEXIBLE DEVICE AT THAT GAP CAPABLE OF A DIFFERENTIAL MOVEMENT IN ANY OF 6 DIRECTIONS OF TWICE THE GAP BUT NEED NOT EXCEED 4", AND SHALL BE ANCHORED AT BOTH SIDES.

*** ENERGY NOTES ***

1. COMPLIANCE METHOD AND CLIMATE ZONE ON PLAN WITH SIGNED STATEMENTS AS SPECIFIED BY C.A.C., TITLE 24.
2. INSULATION AND MATERIAL ASSEMBLY SECTIONS FOR WALL, ROOF, AND FLOOR SHOWN ON ARCHITECTURAL DRAWINGS.
3. WINDOW AND DOOR SCHEDULES, GLAZED AREA, TYPE OF GLASS AND SHADING COEFFICIENT ARE SHOWN ON ARCHITECTURAL DRAWINGS.
4. CONDITIONED ZONED AREA IS SHOWN ON ARCHITECTURAL DRAWINGS.
5. INSULATION MATERIAL SHALL MEET THE CALIFORNIA QUALITY STANDARD PER SECTION 118, ENERGY EFFICIENCY STANDARDS (E.E.S.).
6. DOORS AND WINDOWS SHALL MEET THE MINIMUM INFILTRATION REQUIREMENTS PER SECTION 116 E.E.S.
7. ALL PIPING AND DUCTWORK SHALL BE INSULATED CONSISTENT WITH THE REQUIREMENTS OF SECTION 118, 123, 124, E.E.S. AND TABLE 10D OF UMC.
8. ALL HVAC SYSTEMS SHALL MEET THE CONTROL REQUIREMENTS PER SECTION 112 AND 122 E.E.S.
9. ALL HVAC EQUIPMENT AND APPLIANCES SHALL MEET THE REQUIREMENTS PER SECTION 111-113, 115, & 120-129, E.E.S.

MERRICK & ASSOCIATES
MECHANICAL CONSULTING AND ENGINEERING
9606 Tierra Grande Street, Suite 206
San Diego, California 92126
(619) 549-9980 (FAX) 549-9987

REGISTERED PROFESSIONAL ENGINEER DAVID P. MERRICK No. 22271 Exp. 12/31/99 MECHANICAL STATE OF CALIFORNIA

MECHANICAL SCHEDULES, NOTES AND LEGEND

CARMICHAEL-KEMP ARCHITECTS A.I.A.

REGISTERED PROFESSIONAL ENGINEER CHARLES A. SCHAEFFER No. C 20592 EXPIRES JAN. 30, 2000 STATE OF CALIFORNIA

CERTIFICATION STAMP DIV. OF STATE ARCHITECT OFFICE OF REGULATION SERVICES
APPL NO 4-10616
AC 4 FLS SS
DATE DEC 14 1999

NEW SCIENCE BUILDING at MT. MIGUEL HIGH SCHOOL
1800 Sweetwater Road, Spring Valley, CA 91977
GROSSMONT UNION HIGH SCHOOL DISTRICT

JOB NO.	9822-1
DATE:	12-14-99
SHEET NUMBER	M1
BINDING ORDER	64 OF 82

C:\PROJECTS\99\9924-Mt Miguel Science\M1.dwg Tue Dec 14 07:48:40 1999 MIKE S

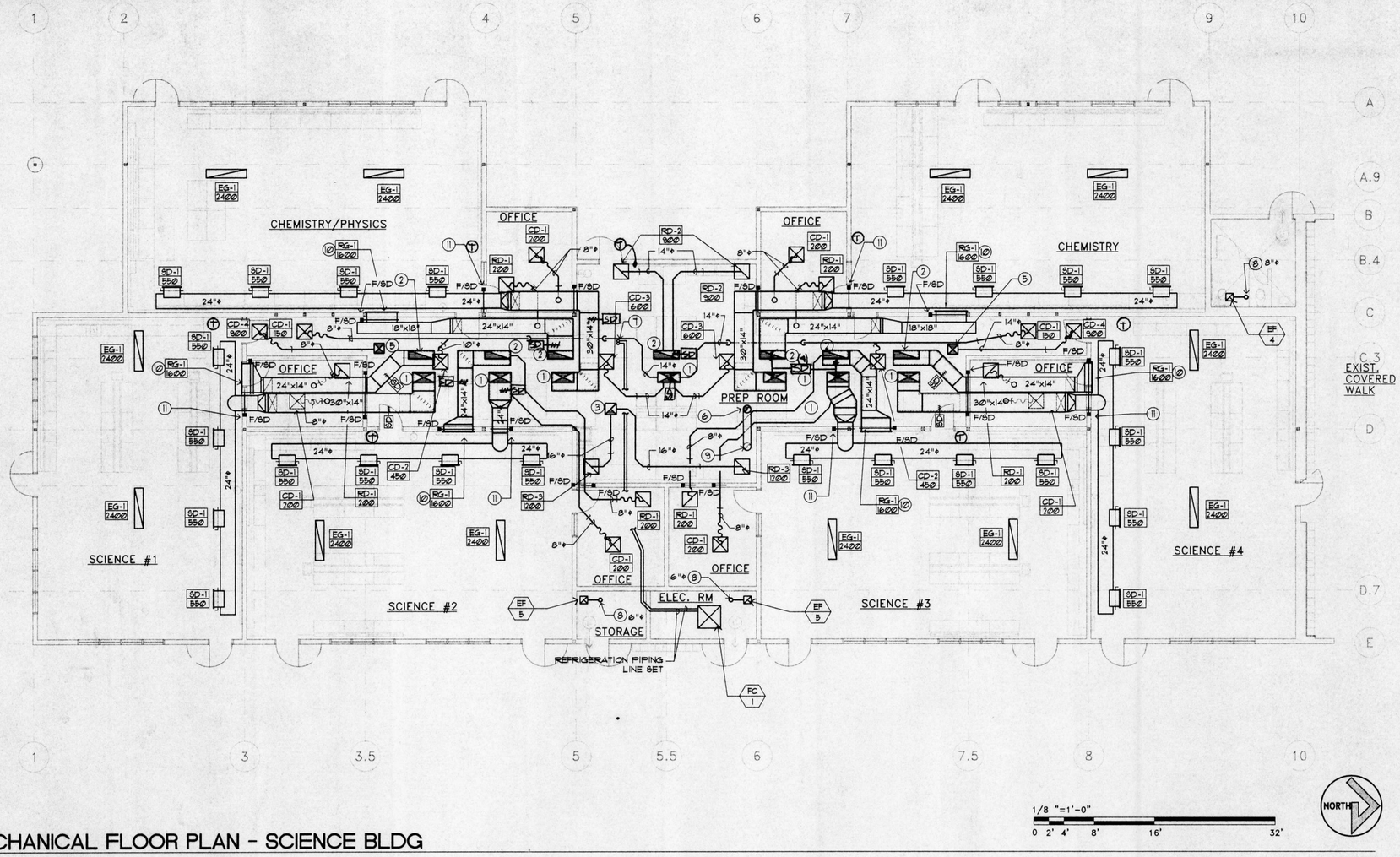

1 MECHANICAL FLOOR PLAN - SCIENCE BLDG

DIFFUSER SCHEDULE							
CD-1 — MARK 300 — CFM MARK	MFG	MODEL	MAX CFM	NECK SIZE	FACE SIZE	BORDER TYPE	FINISH
CD-1	KRUEGER	1240	200	6"x6"	24"x24"	F23	49 WHITE
CD-2	KRUEGER	1240	450	10"x10"	24"x24"	F23	49 WHITE
CD-3	KRUEGER	1240	600	12"x12"	24"x24"	F23	49 WHITE
CD-4	KRUEGER	1240	900	16"x16"	24"x24"	F23	49 WHITE
SD-1	KRUEGER	5880-H	550	26"x12"	30"x14"	811-A	49 WHITE
RD-1	KRUEGER	6590	200	8" DIA.	24"x24"	F23	WHITE
RD-2	KRUEGER	6290	900	14"x14"	24"x24"	F23	WHITE
RD-3	KRUEGER	6290	1200	16"x16"	24"x24"	F23	WHITE
RG-1	KRUEGER	S580	1600	46"x18"	48"x20"	851	WHITE
EC-1	KRUEGER	EGC-5	2400	22"x22"	24"x24"	STANDARD	WHITE
EG-1	KRUEGER	S580	2400	62"x10"	64"x12"	851	WHITE

ALL DIFFUSERS TO BE COMPLETE WITH PROPER MOUNTING HARDWARE AND OTHER ACCESSORIES NECESSARY FOR A COMPLETE INSTALLATION. PROVIDE THROW PATTERNS AS DICTATED BY LOCATION OF DIFFUSER IN RELATION TO SIZE OF ROOM. PROVIDE BALANCING DAMPER WITH LOCKING QUADRANTS, END BEARINGS AND POSITION INDICATORS AT EACH TAKE-OFF.

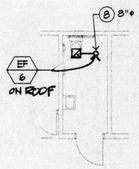

2 PARTIAL MECHANICAL FLOOR PLAN - BLDG 400

1/8 "=1'-0"
0 2' 4' 8' 16' 32'

KEYED NOTES

1. 34"x14" (36"x16" O.D.) INTERNALLY LINED SUPPLY PLENUM UP TO HVAC UNIT ON ROOF. PROVIDE FLEX CONNECTION AT CONNECTION ROOF CURB FLANGE. SUPPORT PLENUM INDEPENDANTLY OF CURB AND FLEX CONNECTION. PLENUM IS NOT TO HANG FROM FLEXIBLE CONNECTION OF ROOF CURB ABOVE.
2. 38"x12" (40"x14" O.D.) INTERNALLY LINED RETURN PLENUM UP TO HVAC UNIT ON ROOF. PROVIDE FLEX CONNECTION AT CONNECTION ROOF CURB FLANGE. SUPPORT PLENUM INDEPENDANTLY OF CURB AND FLEX CONNECTION. PLENUM IS NOT TO HANG FROM FLEXIBLE CONNECTION OF ROOF CURB ABOVE.
3. 18"x18" EXHAUST DUCT UP THRU ROOF TO EF-1 ON ROOF.
4. 22"x22" OUTSIDE AIR DUCT UP THRU ROOF TO GRV-24 ON ROOF.
5. 16"x16" OUTSIDE AIR DUCT UP THRU ROOF TO GRV-16 ON ROOF.
6. 12"ϕ FUME HOOD EXHAUST DUCT UP THRU ROOF TO EF-2 ON ROOF.
7. REFRIGERATION PIPING LINE SET UP THRU ROOF TO CONDENSING UNIT.
8. EXHAUST DUCT UP THRU ROOF TO SELF-FLASHING T-CAP.
9. 12" ϕ EXPOSEDSTAINLESS STEEL EXHAUST DUCT DOWN THRU T-BAR CEILING TO FUME HOOD. PROVIDE TRANSITION AND GASKETED STAINLESS STEEL DAMPER. PROVIDE STAINLESS STEEL ESCHUTEON / TRIM RING AT DUCT PENETRATION THRU CEILING.
10. PROVIDE RUSKIN MODEL #FSD60FA FRONT ACCESS COMBINATION FIRE/SMOKE DAMPER

GENERAL NOTES

1. ALL RECTANGULAR DUCTWORK IS TO BE LINED WITH 1 1/2" THICK "JM LINACOUSTIC R" DUCT LINER.
2. ALL EXPOSED DUCTWORK, GRILLES, DAMPERS AND FITTINGS SHALL BE BONDERIZED AND PAINTED. (SEE ARCH. FOR COLOR)

MERRICK+ASSOCIATES
MECHANICAL CONSULTING AND ENGINEERING
9606 Tierra Grande Street, Suite 206
San Diego, California 92126
(619) 549-9980 (FAX) 549-9987

REGISTERED PROFESSIONAL ENGINEER DAVID P. MERRICK No. 22271 EXP. 12/31/99 MECHANICAL STATE OF CALIFORNIA

CARMICHAEL-KEMP ARCHITECTS A.I.A.
PUBLISHED PLANS • LOS ANGELES • U.S.A. • 213-386-7255

REGISTERED ARCHITECT JAMAR J. SCHAEFFER C 20592 EXPIRES JAN 31, 2000 STATE OF CALIFORNIA

REGISTRATION STAMP
DSA, DIVISION OF STATE ARCHITECT
OFFICE OF REGULATION SERVICES
APPL. NO 4-10516
AC FLS SS
DATE 1 4 1999

NEW SCIENCE BUILDING at MT. MIGUEL HIGH SCHOOL
1800 Sweetwater Road, Spring Valley, CA 91977

GROSSMONT UNION HIGH SCHOOL DISTRICT

MECHANICAL FLOOR PLAN - SCIENCE BLDG

JOB NO. 9822-1
DATE: 12-14-99
SHEET NUMBER
M2
BINDING ORDER 65 OF 82

C:\PROJECTS\99\9824-Mt Miguel Science\m2-m4.dwg Tue Dec 14 07:49:44 1999 MIKE'S

GENERAL NOTES

A. ALL RECTANGULAR DUCTWORK IS TO BE LINED WITH 1" MANVILLE LINACOUSTIC MAT FACED OR PERMACOTE DUCT LINER.

B. ALL EXPOSED INTERIOR DUCTWORK IS TO BE BONDERIZED AND PAINTED. (SEE ARCHITECTURAL SPECIFICATION FOR PAINT TYPE AND COLOR.)

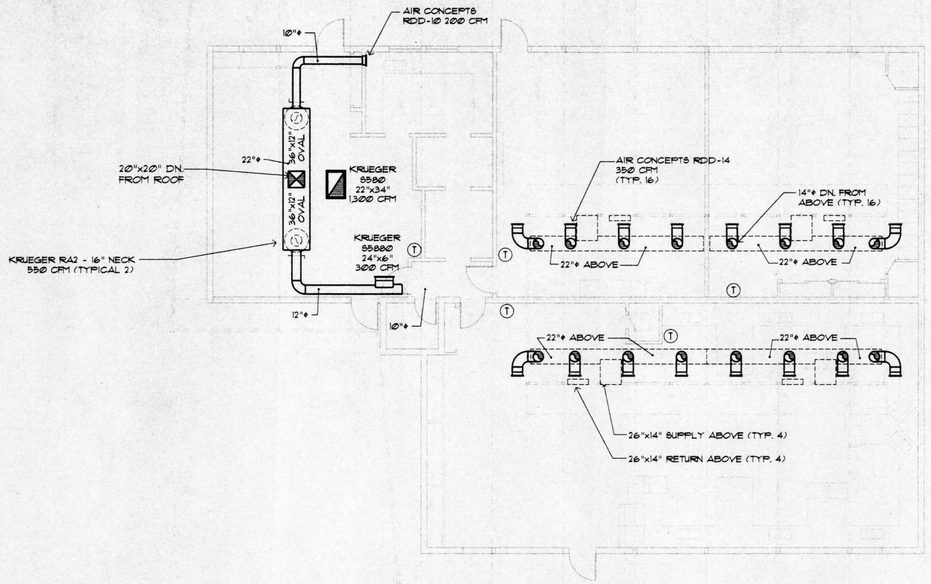

1 MECHANICAL FLOOR PLAN - BUILDING 500

1/8 "=1'-0"
0 2' 4' 8' 16' 32'

NORTH

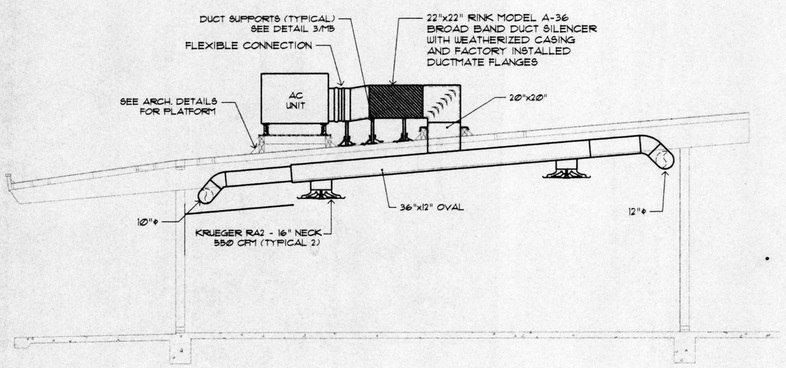

3 PARTIAL BUILDING SECTION - BUILDING 500

1/4 "=1'-0"
0 1' 2' 4' 8' 16'

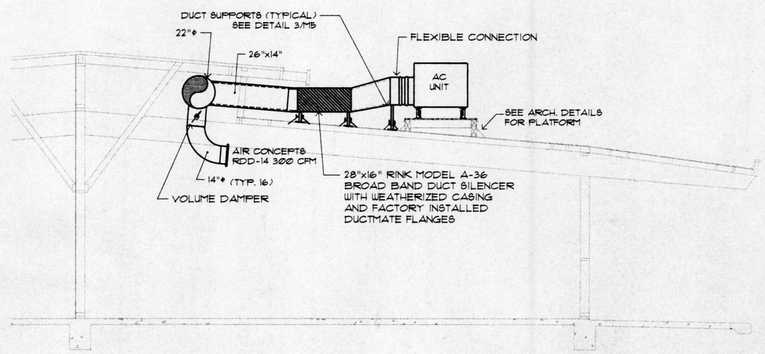

2 PARTIAL BUILDING SECTION - BUILDING 500

1/4 "=1'-0"
0 1' 2' 4' 8' 16'

MERRICK & ASSOCIATES
MECHANICAL CONSULTING AND ENGINEERING
9606 Tierra Grande Street, Suite 206
San Diego, California 92126
(619) 549-9980 (FAX) 549-9987

REGISTERED PROFESSIONAL ENGINEER DAVID P. MERRICK C 22271 Exp. 12/31/99 MECHANICAL STATE OF CALIFORNIA

CARMICHAEL-KEMP ARCHITECTS A.I.A.

DENTIFICATION STAMP ON OPERATIONAL PROJECT OFFICE OF REGULATION SERVICES
APPL NO 4-10616
AC R-9 SS
DATE DEC 14 1999

MECHANICAL FLOOR PLAN - BUILDING 500

NEW SCIENCE BUILDING at MT. MIGUEL HIGH SCHOOL
1800 Sweetwater Road, Spring Valley, CA 91977
GROSSMONT UNION HIGH SCHOOL DISTRICT

JOB NO. 9822-1
DATE: 12-14-99
SHEET NUMBER
M3
BINDING ORDER 66 OF 82

C:\PROJECTS\1999\9924-Mt. Miguel Science\m3-m5.dwg Tue Dec 14 08:34:31 1999 MIKE'S

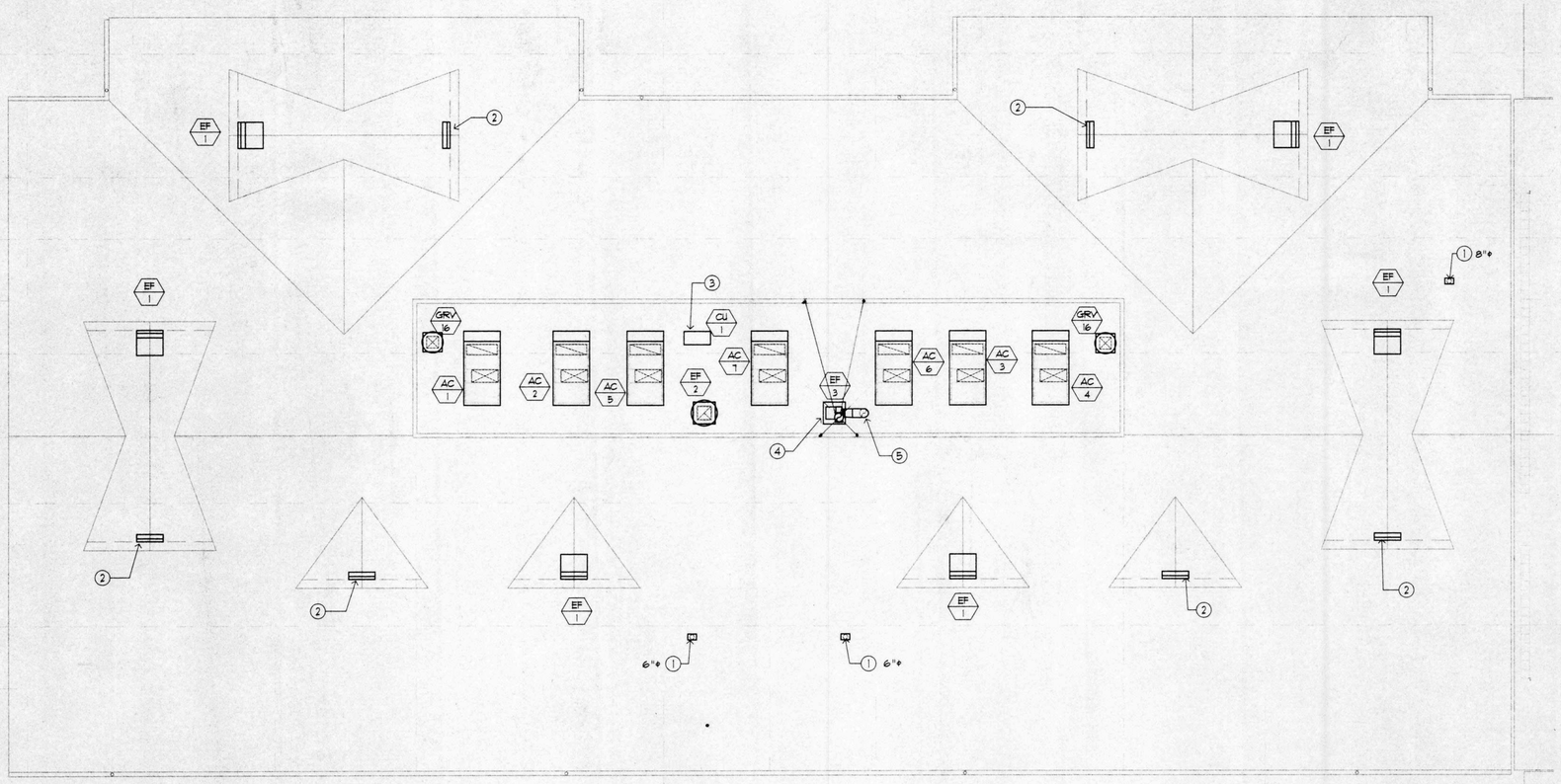

1/8 "=1'-0"

0 2' 4' 8' 16' 32'

NORTH

1 MECHANICAL ROOF PLAN - SCIENCE BLDG

KEYED NOTES

1. EXHAUST T-CAP FROM EXHAUST FAN BELOW
2. PROVIDE LOUVER AND COUNTER-BALANCED BACKDRAFT DAMPER TO MATCH ASSEMBLY AT EF-1'S
3. MOUNT CONDENSING UNIT ON MASON SUPER W PADS ON BUILT UP ROOF PLATFORM (SEE ARCHITECTURAL DRAWINGS FOR PLATFORM AND ATTACHMENTS)
4. MOUNT EXHAUST FAN ON MASON SUPER W PADS ON BUILT UP ROOF PLATFORM (SEE ARCHITECTURAL DRAWINGS FOR PLATFORM AND ATTACHMENTS)
5. 12"ϕ STAINLESS STEEL FUME HOOD EXHAUST DOWN THRU ROOF. ROOF PENETRATION TO BE THRU 16"x16" ROOF CURB. (SEE ARCHITECTURAL DRAWINGS FOR CURB DETAIL)

MERRICK & ASSOCIATES
MECHANICAL CONSULTING AND ENGINEERING
9606 Tierra Grande Street, Suite 206
San Diego, California 92126
(619) 549-9980 (FAX) 549-9987

REGISTERED PROFESSIONAL ENGINEER DAVID P. MERRICK 22271 Exp. 12/31/99 MECHANICAL STATE OF CALIFORNIA

MECHANICAL ROOF PLAN - SCIENCE BLDG

CARMICHAEL-KEMP ARCHITECTS A.I.A.

REGISTERED ARCHITECT LICENSED TO PRACTICE ARCHITECTURE IN THE STATE OF CALIFORNIA TAMARA J. SCHAEFFER C 20592 EXPIRES NOV. 30, 2000

DENTRIFICATION STAMP ON DEPARTMENT APPROVAL OFFICE OF REGULATION SERVICES
APPL NO 4-101516
AC FL9 SS
DATE DEC 14 1999

NEW SCIENCE BUILDING at MT. MIGUEL HIGH SCHOOL
1800 Sweetwater Road, Spring Valley, CA 91977

GROSSMONT UNION HIGH SCHOOL DISTRICT

JOB NO. 9822-1
DATE: 12-14-99
SHEET NUMBER
M4
BINDING ORDER 67 OF 82

C:\PROJECTS\99\9824-Mt Miguel Science\m2-m4.dwg Tue Dec 14 08:26:18 1999 MIKE'S

GENERAL NOTES

A. ALL RECTANGULAR DUCTWORK IS TO BE LINED WITH 1" MANVILLE LINACOUSTIC MAT FACED OR FERMACOTE DUCT LINER.

B. ALL EXPOSED INTERIOR DUCTWORK IS TO BE BONDERIZED AND PAINTED. (SEE ARCHITECTURAL SPECIFICATION FOR PAINT TYPE AND COLOR.)

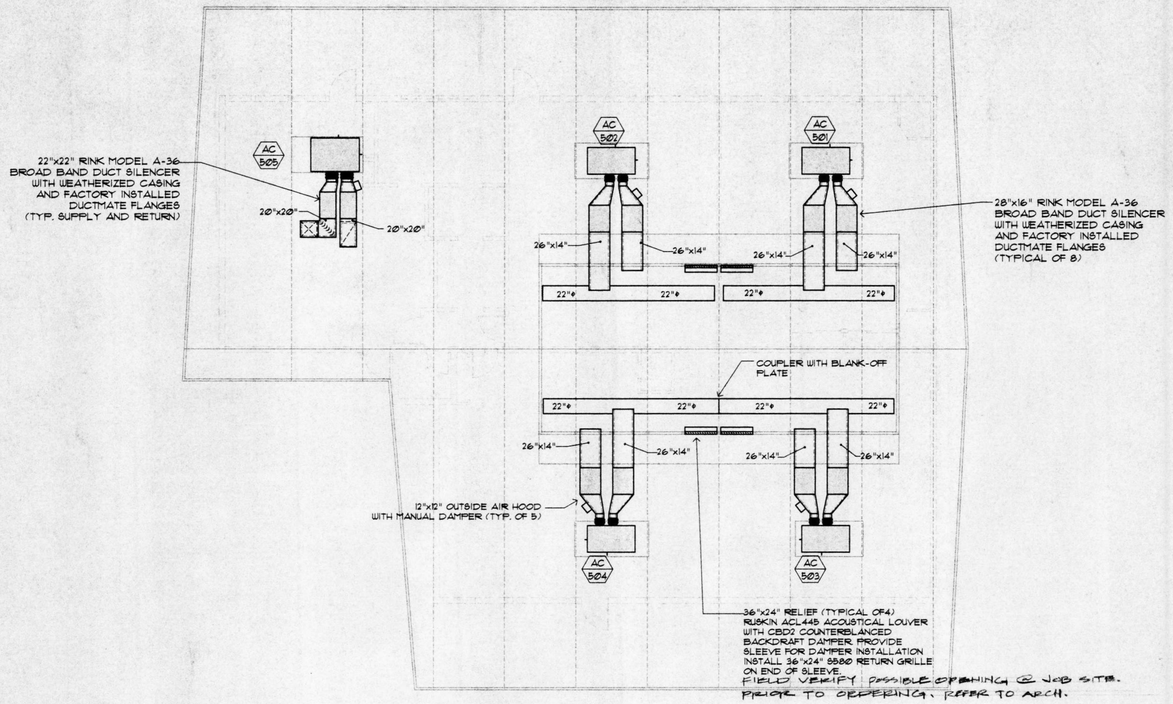

1 MECHANICAL ROOF PLAN - BUILDING 500

1/8"=1'-0"

0 2' 4' 8' 16' 32'

NORTH

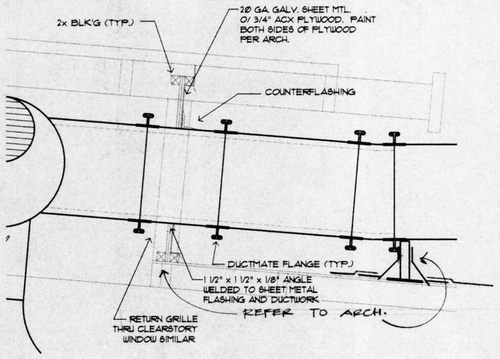

NOTE:
ALL INTERIOR EXPOSED METAL (I.E. DUCT, HANGERS, GRILLES) AND EXPOSED WOOD TO BE PAINTED PER DISTRICT SPECIFICATION IN SUPPLEMENTARY CONDITIONS (TYPICAL ALL AREAS)

4 DUCT THRU CLEARSTORY DETAIL

1"=1'-0"

0 6" 1'-0" 2'-0" 4'-0"

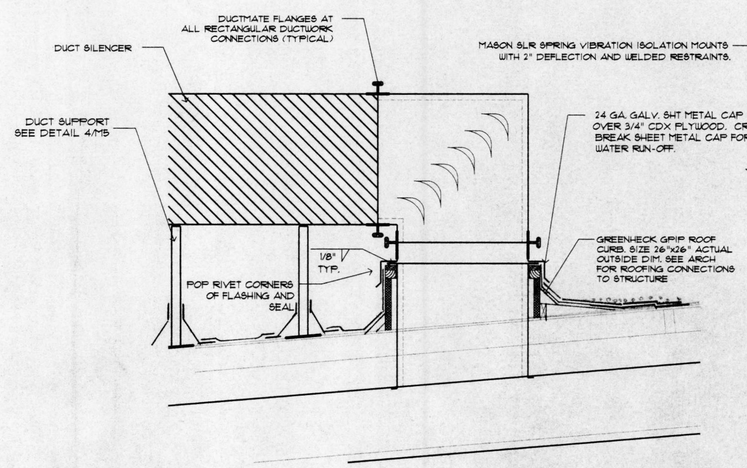

3 DUCT THRU ROOF DETAIL

1"=1'-0"

0 6" 1'-0" 2'-0" 4'-0"

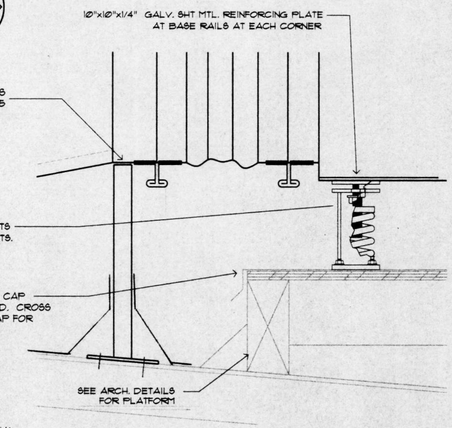

2 AC UNIT PLATFORM DETAIL

1"=6"

0 3" 6" 1'-0" 2'-0"

MERRICK+ASSOCIATES
MECHANICAL CONSULTING AND ENGINEERING
9606 Tierra Grande Street, Suite 206
San Diego, California 92126
(619) 549-9980 (FAX) 549-9987

REGISTERED PROFESSIONAL ENGINEER DAVID P. MERRICK No. M-22271 Exp. 12/31/99 MECHANICAL STATE OF CALIFORNIA

MECHANICAL ROOF PLAN - BUILDING 500

NEW SCIENCE BUILDING at MT. MIGUEL HIGH SCHOOL
1800 Sweetwater Road, Spring Valley, CA 91977

GROSSMONT UNION HIGH SCHOOL DISTRICT

CARMICHAEL-KEMP ARCHITECTS A.I.A.

CERTIFICATION STAMP DIV. OF STATE ARCHITECT OFFICE OF REGULATION SERVICES
APPL. NO. 4-07618
FLS SS
AC DATE DSA 1 & 1999

JOB NO. 9822-1
DATE 12-14-99
SHEET NUMBER M5
BINDING ORDER 68 OF 82

C:\PROJECTS\99\9824-Mt Miguel Science\m3-m5.dwg Tue Dec 14 08:38:35 1999 MIKE'S

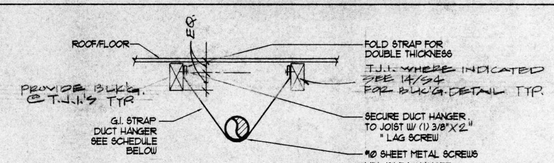

NOTE:
PRE-DRILL ALL BEAMS & JOISTS AS REQUIRED.

MAX. ROUND DUCT HANGER	MAX. LOAD EACH HANGER	MAX. HANGER SPACING	HANGER SIZE
UP TO 9" DIA.	24#	6'-0"	1 1/2" X 18 G.A.
9" TO 26"	96#	6'-0"	1 1/2" X 16 G.A.

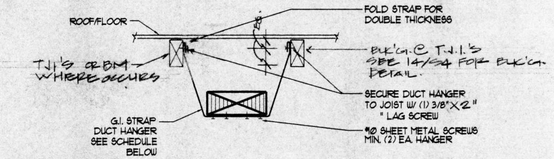

NOTE:
PRE-DRILL ALL BEAMS & JOISTS AS REQUIRED.

MAX. RECT. OR SQ. DUCT DIM.	MAX. LOAD EACH HANGER	MAX. HANGER SPACING	HANGER SIZE
UP TO 16"	72#	6'-0"	1 1/2" X 18 G.A.
16" TO 36"	96#	6'-0"	1 1/2" X 16 G.A.

6 DUCT HANGER STRAP DETAIL (• CONCEALED DUCTWORK)

N.T.S.

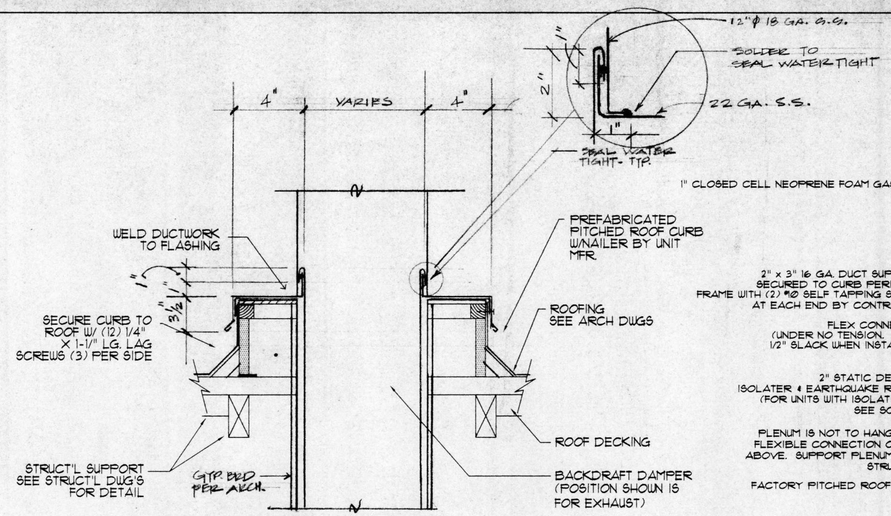

3 DUCT THRU ROOF DETAIL

N.T.S.

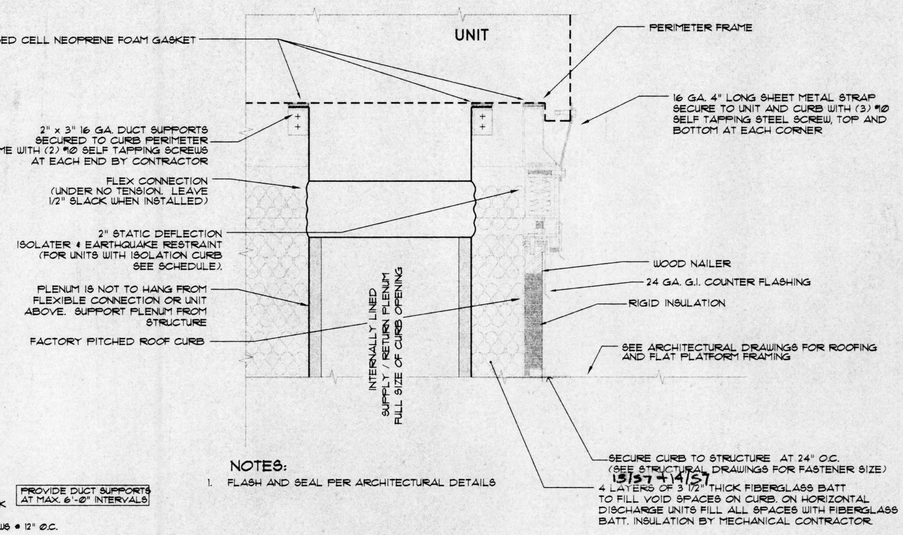

NOTES:
1. FLASH AND SEAL PER ARCHITECTURAL DETAILS

1 ROOF CURB DETAIL

N.T.S.

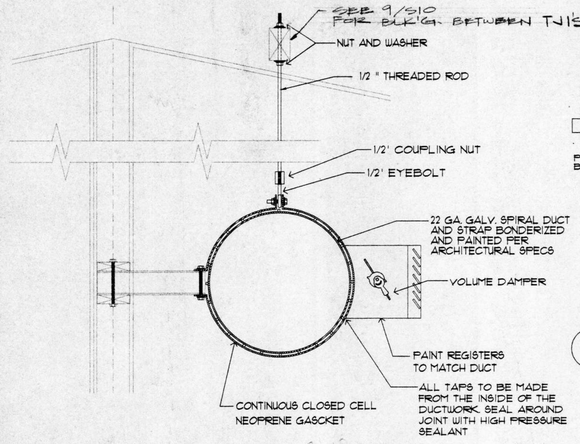

7 EXPOSED DUCT HANGER ROD DETAIL

N.T.S.

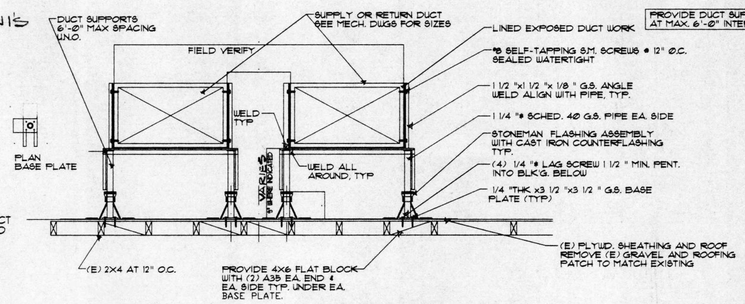

PROVIDE DUCT SUPPORTS AT MAX. 6'-0" INTERVALS

4 DUCT SUPPORT AT ROOF OF BLDG 500

N.T.S.

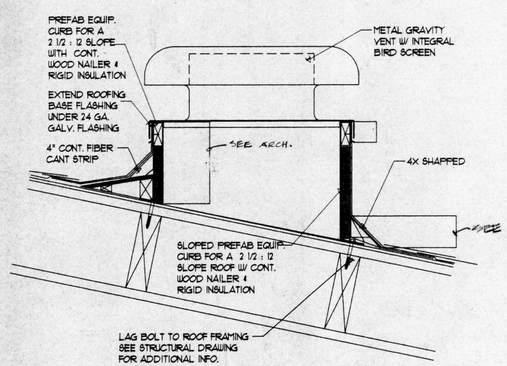

8 EXHAUST FAN / INTAKE HOOD DETAIL

N.T.S.

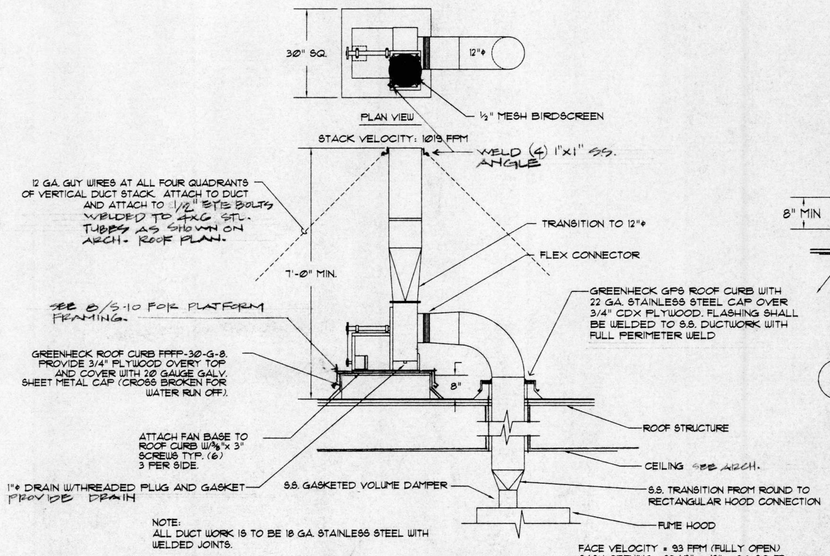

NOTE:
ALL DUCT WORK IS TO BE 18 GA. STAINLESS STEEL WITH WELDED JOINTS.

FACE VELOCITY = 93 FPM (FULLY OPEN)
SASH OPENING: 29 1/2" x 42" = 8.6 SQ. FT.
800 CFM / 8.6 SQ. FT. = 93 FPM

5 EXHAUST FAN / INTAKE HOOD DETAIL

N.T.S.

ALL GALV. DUCT PENETRATION WILL BE SIMILAR.

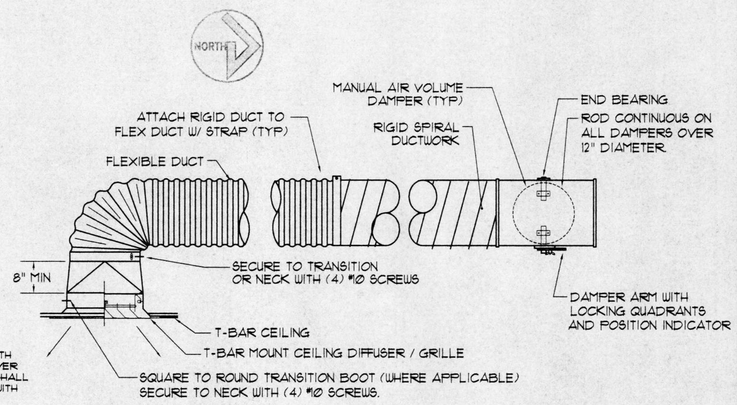

2 DIFFUSER DETAIL (• T-BAR CEILINGS)

N.T.S.

MERRICK & ASSOCIATES
MECHANICAL CONSULTING AND ENGINEERING
9606 Tierra Grande Street, Suite 206
San Diego, California 92126
(619) 549-9980 (FAX) 549-9987

REGISTERED PROFESSIONAL ENGINEER DAVID P. MERRICK No. 12271 MECHANICAL STATE OF CALIFORNIA Exp. 12/31/99

MECHANICAL DETAILS

CARMICHAEL-KEMP ARCHITECTS A.I.A.

REGISTERED ARCHITECT TAMARA J. SCHAEFFER No. C 20592 EXPIRES NOV. 30, 2000 STATE OF CALIFORNIA

IDENTIFICATION STAMP DIVISION OF STATE ARCHITECT OFFICE OF REGULATION SERVICES
APPL NO 4-01516
AC FLS SS
DATE DEC 1 4 1999

NEW SCIENCE BUILDING at MT. MIGUEL HIGH SCHOOL
1800 Sweetwater Road, Spring Valley, CA 91977
GROSSMONT UNION HIGH SCHOOL DISTRICT

JOB NO.	9822-1
DATE:	12-14-99
SHEET NUMBER	M6
BINDING ORDER	69 OF 82

C:\PROJECTS\99\9924-Mt Miguel Science\M6.dwg Tue Dec 14 08:41:25 1999 MIKE S

DETAIL 1

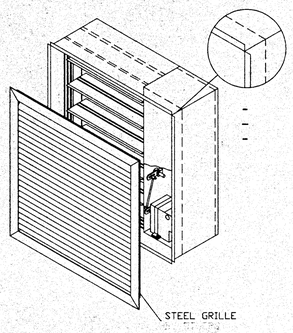

METAL STUD CONSTRUCTION WALL
VERTICAL INSTALLATION, DUCT CONNECTION TO DAMPER
(TOP VIEW)

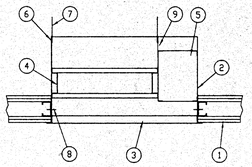

FIGURE 1

METAL STUD CONSTRUCTION WALL
VERTICAL INSTALLATION, DUCT CONNECTION TO SLEEVE
(TOP VIEW)

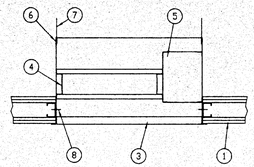

FIGURE 2

ITEM.	DESCRIPTION
1.	UL RATED WALL ASSEMBLY
2.	FIRE/SMOKE DAMPER SLEEVE
3.	STEEL FRAMED GRILLE WITH ALUMINUM OR STEEL CORE (WITH OR W/O OBD) BY OTHERS
4.	FIRE/SMOKE DAMPER
5.	ACCESS CABINET
6.	S-JOINT/DUCT MATE, SLEEVE TO DUCT (TYP)
7.	DUCT
8.	#10 SCREWS, 12" C-C (TYP)
9.	ACESS CABINET REAR PANEL, ANGLED TO ALLOW DUCT CONNECTION (BY RUSKIN, USE IS OPTIONAL DEPENDING ON FIGURE 1 OR FIGURE 2 APPLICATION).

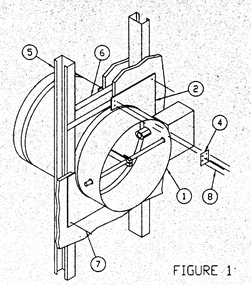

FIGURE 1

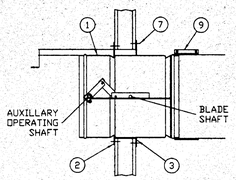

FIGURE 2

ITEM.	DESCRIPTION
1.	FSDR25 COMBINATION FIRE AND LEAKAGE RATED DAMPER *OPERATOR/ACTUATOR (LOCATION MAY VARY). DAMPER MAY BE SUPPLIED WITHOUT OPERATOR/ACTUATOR INSTALLED. RUSKIN'S UL LISTED FIRE DAMPER OPERATORS SPECIFIED ON DAMPER MARKING MAY BE FIELD INSTALLED. SEE OPERATOR/ACTUATOR INSTALLATION INSTRUCTIONS FOR FIELD MOUNTING OF DAMPER OPERATORS.
2.	RETAINING PLATE, 20 GA STEEL
3.	DAMPER PLATE, 20 GA PLATE
4.	SPLICE PLATE, 20 GA STEEL, TYP BOTH PLATES
5.	STEEL STUD, 25 GA MIN, 2 1/2" WIDE MIN
6.	STEEL RUNNER, 25 GA MIN, 2 1/2" WIDE MIN
7.	#10 SHEET METAL SCREW
8.	1/8" DIA STEEL POP RIVET, OR #10 X 1/2 "SHEET METAL SCREW, OR 1/2" LONG WELDS
9.	4" DRAW BAND

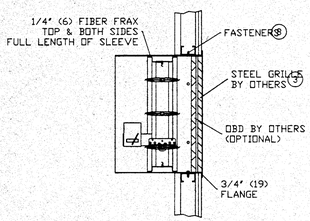

TYPICAL FSD60FA INSTALLATION
WITH OPTIONAL OBD

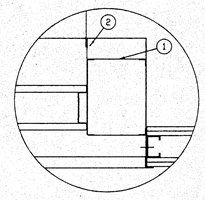

ITEM.	DESCRIPTION
1.	ACCESS CABINET
2.	ACCESS CABINET REAR PANEL, ANGLED TO ALLOW DUCT CONNECTION (BY RUSKIN, USE IS OPTIONAL DEPENDING ON FIGURE 1 OR FIGURE 2 APPLICATION).

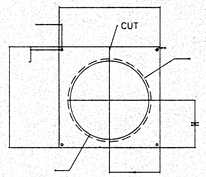

DAMPER AND RETAINING
PLATES DETAIL

ALL DIMENSIONS IN INCHES

A AND B = DAMPER DIA PLUS 3"
D1 = DAMPER DIA MINUS 9/16" FOR RETAINING PLATE
D2 = DAMPER DIA FOR DAMPER PLATE

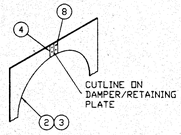

SPLICE DETAIL

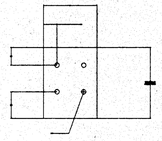

SPLICE PLATE DETAIL
20 GA. GALV.

3 FRONT ACCESS FIRE / SMOKE DAMPER AT RETURN GRILLE

N.T.S.

1 ROUND FIRE DAMPER DETAIL AT EXPOSED DUCT

N.T.S.

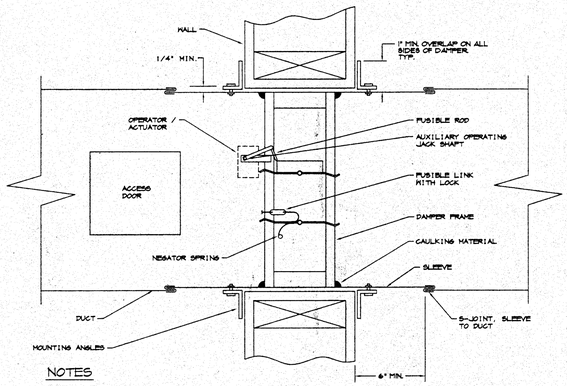

NOTES

1. MOUNTING ANGLES SHALL BE 1-1/2" x 1-1/2" x 16 GAUGE MIN. FASTENED WITH NUMBER 10 SCREWS 8" ON CENTER.
2. BOTH INSIDE AND OUTSIDE OF FIRE DAMPER SLEEVE SHALL BE COATED WITH INTUMESCENT MASTIC TO THE CENTERLINE OF THE FIRE DAMPER.
3. USE ONLY STATE OF CALIFORNIA FIRE MARSHALL LISTED FIRE DAMPERS AND INSTALL IN ACCORDANCE WITH STATE FIRE MARSHALL LISTING NUMBER 8225-245:005 AND U.L. STD. 555.
4. GENERAL CONTRACTOR SHALL COORDINATE CEILING ACCESS DOORS AS REQUIRED TO ACCESS DAMPER ACCESS DOORS IN DUCT.
5. ACCESS DOOR SHALL BE PROVIDED IN DUCT AND SHALL BE OF ADEQUATE SIZE AND LOCATION TO PERMIT MAINTENANCE AND RESETTING OF DAMPER.

4 STANDARD FIRE / SMOKE DAMPER DETAIL

N.T.S.

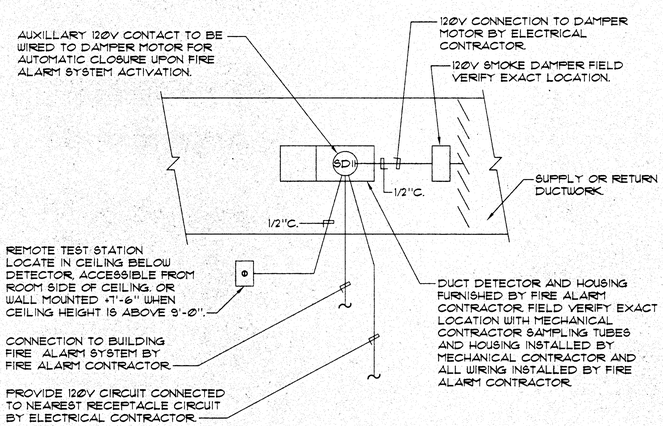

2 FIRE / SMOKE DETECTOR WIRING DIAGRAM

N.T.S.

MERRICK+ASSOCIATES
MECHANICAL CONSULTING AND ENGINEERING
9606 Tierra Grande Street, Suite 206
San Diego, California 92126
(619) 549-9980 (FAX) 549-9987

REGISTERED PROFESSIONAL ENGINEER
DAVID P. MERRICK
No. 22271
EXP. 12/31/99
MECHANICAL
STATE OF CALIFORNIA

MECHANICAL DETAILS

CARMICHAEL-KEMP
ARCHITECTS
A.I.A.

REGISTERED PROFESSIONAL ENGINEER
STEVEN J. SCHAEFFER
C 20592
DATE 2/28/99
STATE OF CALIFORNIA

IDENTIFICATION STAMP
DN, DSA/SS, DSA/FS, DSA/PCI
OFFICE OF REGULATION SERVICES
APPL. NO 4-01598
AC RJS SS
DATE DEC 1 4 1999

NEW SCIENCE BUILDING at MT. MIGUEL HIGH SCHOOL
1800 Sweetwater Road, Spring Valley, CA 91977
GROSSMONT UNION HIGH SCHOOL DISTRICT

JOB NO. 9822-1
DATE: 12-14-99
SHEET NUMBER
M7
BINDING ORDER 70 of 82

C:\PROJECTS\99\9824-Mt Miguel Science\M7.dwg Tue Dec 14 08:45:45 1999 MIKE'S

ELECTRICAL SYMBOLS

- 2'x4' RECESSED MOUNTED FLUORESCENT LIGHT FIXTURE. TYPE AS NOTED ON PLANS.
- CEILING MOUNTED FLUORESCENT LIGHT FIXTURE: TYPE AS NOTED ON PLANS.
- CEILING LIGHT FIXTURE: TYPE AS NOTED ON PLANS.
- WALL MOUNTED LIGHT FIXTURE: TYPE AS NOTED ON PLANS.
- WALL MOUNTED COMPACT FLUORESCENT LIGHT FIXTURE: TYPE AS NOTED ON PLANS.
- EXIT SIGN WITH JUCTION BOX APPROVED FOR THRU WIRING.
- 5a/A — LIGHTING FIXTURE, "5" DENOTES CIRCUIT NUMBER, LOWER CASE LETTER "a" DENOTES CONTROLLING SWITCH, UPPER CASE LETTER "A" DENOTES FIXTURE TYPE.
- FLUORESCENT LIGHT WITH EMERGENCY POWER PACK
- CEILING EXHAUST FAN.
- JUNCTION BOX: MOUNT +15" UNLESS NOTED OTHERWISE.
- JUNCTION BOX: MOUNTED ABOVE ACCESSIBLE CEILING OR IN ATTIC SPACE.
- DUPLEX RECEPTACLE: 125V., 20 AMP., NEMA 5-20R. +18" UNLESS OTHERWISE NOTED.
- SPECIAL OUTLET RECEPTACLE. RATING AS INDICATED ON PLAN
- W.P. — WEATHERPROOF RECEPTACLE ("GFI" TYPE): 125V., 20 AMP., NEMA 5-20R WITH WEATHERPROOF COVER. MOUNT IN A 2" DEEP BOX. 18" UNLESS OTHERWISE NOTED.
- QUAD RECEPTACLE: TWO DUPLEX RECEPTACLES IN A 2-GANG BOX. 18" UNLESS OTHERWISE NOTED.
- FLUSH FLOOR 1-GANG OUTLET: FULLY ADJUSTABLE 1-GANG CAST FLOOR BOX WITH NEMA 5-15R DUPLEX RECEPTACLE, CARPET FLANGE AS REQUIRED.
- DUPLEX RECEPTACLE: 125V., 20 AMP., NEMA 5-20R. +18" UNLESS OTHERWISE NOTED.
- GROUND FAULT INTERRUPTER TYPE DUPLEX RECEPTACLE: 125V., 20 AMP., 5-20R. MOUNT IN A 2" DEEP BOX. 18" UNLESS OTHERWISE NOTED.
- EXISTING CONDUIT WITH EXISTING WIRE. (E) EXISTING
- GROUND ELECTRODE. (N) NEW
- CONDUIT: EXPOSED IN UNFINISHED AREA; CONCEALED ABOVE CEILING OR IN WALL IN FINISHED AREAS.
- ←F1— SIGNAL SYSTEM HOMERUN TO TERMINAL CABINET IN THE BUILDING. TERMINATE AT THE PROPER CABINET FOR THE SYSTEM.
- A-1,3,5 — HOMERUN TO PANEL "A", CIRCUITS 1, 3, 5.
- CONDUIT: IN OR BELOW FLOOR OR BELOW GRADE.

1/2"C,2#12	3#12 1/2"C.	1/2"C,4#12	1/2"C,5#12	
3/4"C,6#12	3/4"C,7#12	1"C,8#12	1"C,9#12	
* #10 1/2"C,2#10	#10 1/2"C,3#10	#10 3/4"C,4#10	#10 3/4"C,5#10	
#10 1"C,6#10	#10 1"C,7#10	#10 1"C,8#10	#10 1"C,9#10	

* FOR MULTIPLE BRANCH CIRCUITS USING A COMMON NEUTRAL FEEDING RECEPTACLES. INCREASE NEUTRAL WIRE ONE SIZE, e.g. FORM #12 TO #10.

#14 1/2"C,2#14	#14 1/2"C,3#14	#14 1/2"C,4#14	#14 1/2"C,5#14	
#14 1/2"C,6#14	#14 1/2"C,7#14	#14 3/4"C,8#14		

- 3/4-1"C — OTHER CONDUIT AND WIRE SIZE AS NOTED ON DRAWINGS.
- LIGHTING PANEL.
- (A) PANEL DESIGNATION, LETTER IDENTIFIES THE PANEL.
- MAIN SERVICE SWITCHBOARD.
- (T) THERMOSTAT OUTLET: 4" SQUARE BOX AT +48".
- Sabc — MULTIPLE SINGLE POLE SWITCHES IN MULTIGANG BOX. NUMBER OF LOWER CASE LETTERS INDICATE NUMBER OF SWITCHES AND SWITCHING CIRCUITS CONTROLLED.
- S — SINGLE POLE SWITCH.
- S_3 — THREE WAY SWITCH. S_2 TWO POLE SWITCH, HORSE POWER RATED.
- S_M — MOMENTARY CONTACT SWITCH. BYPASS TIMER: 0-6 HRS TIMER AT +48".
- S_T — MANUAL MOTOR STARTER: TOGGLE TYPE WITH OVERLOADS.
- S_K — KEY OPERATED SWITCH. PROJECTION SCREEN UP-DOWN SWITCH.
- DISCONNECT SWITCH, H.P. RATED.
- FUSED DISCONNECT SWITCH H.P. RATED WITH CLASS "R" FUSECLIPS.
- H.P. HORSEPOWER. W.P. WEATHERPROOF.
- N.F. NONFUSED. MAGNETIC MOTOR STARTER.
- C.O. CONDUIT ONLY. MOTOR.
- WALL TELEPHONE HANDSET TYPE "T5" AND JACK MOUNTED AT +48".
- DESK TELEPHONE HANDSET. JACK MOUNTED AT +15" U.O.N.
- POWER PACK WITH PROPER RATING TO HANDLE SENSORS AND SLAVE RELAY PACK. WATT STOPPER " OR EQUAL.
- (S) CEILING MTD. OCCUPANCY SENSOR FOR LIGHTING CONTROL: "WATT STOPPER #WT-2205. SET TIME DELAY A 10 MINUTES. LOCATE MINIMUM OF 6 FEET FROM ANY HVAC OUTLET. —LV— LOW VOLTAGE WIRING FOR LIGHTING CONTROL 1/2"c, 3#18 AWG
- SLAVE RELAY PACK, WATT STOPPER OR EQUAL.
- (S) WALL MTD. OCCUPANCY SENSOR WITH SWIVEL MOUNT WATT STOPPER " #DT-200.
- WALL MTD. OCCUPANCY SENSOR SWITCH " WATT STOPPER" #WS-120/277. SET TIME DELAY TO 10 MINUTES.
- (S) SURFACE MOUNTED WALL SPEAKER. TC TIME CLOCK.
- WP (S) EXTERIOR WEATHERPROOF SPEAKER HORN (VANDAL REISTANCE).
- (S) FLUSH CEILING MOUNTED SPEAKER WITH VOLUME CONTROL.
- SURFACE MOUNTED VOLUME CONTROL AT +48".
- TV OUTLET: 5/S BOX, 1-GANG RING AND BLANK COVER.
- (C) CLOCK: ON MASTER CLOCK SYSTEM. SEE ARCH. DRAWING FOR MOUNTING HEIGHT.
- (D) DATA OUTLET: 1 CAT. 5 DATA JACK. (D) FLUSH FLOOR MOUNTED CAT. 5 DATA OITLET FULLY ADJUSTABLE CAST IRON FLOOR BOX WITH 1 DATA CAT. 5 JACK.

TYPICAL MOUNTING HEIGHTS ABOVE FINISHED FLOOR (UNLESS OTHERWISE NOTED ON DRAWINGS)

+48". LIGHT SWITCHES, DIMMER SWITCHES, FIRE ALARM PULL STATION, DUCT DETECTOR TEST PANEL, INTERCOM CALL SWITCH, SPEAKER VOLUME CONTROL, T-STATS, BY-PASS TIMER, WALL TELEPHONE.

+15". ALL DUPLEX RECEPTACLES, WALL OUTLET FOR DESK TELEPHONE, COMPUTER OUTLET, UNLESS OTHERWISE NOTED.

CALL-OUT INDICATES 1"CONDUIT WITH TWO "A" CABLES, TWO "T" CABLES, ONE "B" CABLE AND ONE "S" CABLE.
—1"C,(2)A,T,(1)B,S

—1A—	1/2" CONDUIT WITH ONE "A" CABLE.	—1D—	3/4" CONDUIT WITH ONE "D" CABLE.
—2A—	1/2" CONDUIT WITH TWO "A" CABLES.	—2D—	3/4" CONDUIT WITH TWO "D" CABLE.
—3A—	3/4" CONDUIT WITH THREE "A" CABLES.	—3D—	3/4" CONDUIT WITH THREE "D" CABLE.
—4A—	3/4" CONDUIT WITH FOUR "A" CABLES.	—4D—	3/4" CONDUIT WITH FOUR "D" CABLE.
—5A—	3/4" CONDUIT WITH FIVE "A" CABLES.	—5D—	3/4" CONDUIT WITH FIVE "D" CABLE.
—6A—	3/4" CONDUIT WITH SIX "A" CABLES.	—6D—	3/4" CONDUIT WITH SIX "D" CABLE.
—7A—	3/4" CONDUIT WITH SEVEN "A" CABLES.		
—8A—	1" CONDUIT WITH EIGHT "A" CABLES.		
—9A—	1" CONDUIT WITH NINE "A" CABLES.		
—1T—	1/2"CONDUIT WITH ONE "T" CABLE.		
—2T—	3/4"CONDUIT WITH TWO "T" CABLES.		
—3T—	3/4"CONDUIT WITH THREE "T" CABLES.		
—4T—	1"CONDUIT WITH FOUR "T" CABLES.		
—5T—	1"CONDUIT WITH FIVE "T" CABLES.		
—6T—	1"CONDUIT WITH SIX "T" CABLES.		
—C—	1" C WITH ONE "C" CABLES		

LIGHTING FIXTURE SCHEDULE

ABBREVIATIONS:

CLG = CEILING
REC = RECESS
CHN = CHAIN HUNG
PEN = PENDANT
SPC = SPECIAL
FL = FLUORESCENT
INC = INCANDESCENT
MERC = MERCURY
MH = METAL HALIDE
HPS = HIGH PRESS. SODIUM
LPS = LOW PRESS. SODIUM
STD = STANDARD

NOTES:

1. PROVIDE HIGH FREQUENCY ELECTRONIC, STATE CERTIFIED BALLASTS FOR ALL FLUORESCENT FIXTURES.
2. VERIFY EXACT CEILING TYPE AND PROVIDE PROPER FIXTURES WITH ALL NECESSARY MOUNTING ACCESSORIES .
3. LAMP TYPE CATALOG #'S INDICATED ARE "GENERAL ELECTRIC" #'S UNLESS OTHERWISE NOTED.

TYPE	MTG.	CLASS	MANUFACTURER AND CATALOG NUMBER	FINISH	LAMP NO.	LAMP TYPE	TOTAL WATTS	VOLT	DESCRIPTION
A	REC	FL	PRUDENTIAL #P-8623-96CTE-(2) MR9-PRA-RW-120	STD	6	F32T8-SP41	176	120	TWO RECESSED 2'X4', MASTER/SLAVE, 3 LAMP PRISMATIC LENS, ONE 4-LAMP, AND ONE 2-LAMP ELECTRONIC BALLASTS.
A1	REC	FL	PRUDENTIAL #PEH-8623-96CTE-(2) MR9-PRA-RW-120	STD	6	F32T8-SP41	176	120	SAME AS TYPE "A" EXCEPT WITH SELF-CONTAINED EMERGENCY POWER PACK & ONE FIXTURE & 2-LAMP AND & ONE 1-LAMP BALLASTS.
A2	REC	FL	PRUDENTIAL #P-8623-96CTE-PRA-RW-120	STD	3	F32T8-SP41	89	120	SAME AS TYPE "A" EXCEPT WITH ONE 2-LAMP AND ONE 1-LAMP ELECTRONIC BALLAST AND ONE FIXTURE.
B	CLG	FL	PRUDENTIAL #P-902-96CTETW-PRA-120	STD	4	F32T8-SP41	124	120	SURFACE MOUNTED 9" X 8', 4-LAMP PRISMATIC LENS WITH ONE 4-LAMP ELECTRONIC BALLAST.
B1	CLG	FL	PRUDENTIAL #PEH-902-96CTETW-PRA-120	STD	4	F32T8-SP41	124	120	SAME AS TYPE "B" EXCEPT WITH SELF-CONTAINED EMERGENCY POWER PACK.
C	WALL	FL	LITE CONTROL #W-D-66N-48T8-XA-CWM-120-ELB	STD	4	F32T8-SP41	124	120	WALL MTD 6" X 8', 4-L PRISMATIC LENS WITH ONE 4-LAMP ELECTRONIC BALLAST. REFER TO ARCH. DRAWINGS FOR EXACT HEIGHT AND MOUNTING.
D	CLG/ SPC	FL	FAIL-SAFE #CT-UC-PP-64-H-120-LL PB-120	STD	2	COMPACT FLUORESCENT	62	120	WALL MOUNTED 15" ROUND FLUORESCENT WITH TWO LAMPS.
E	WALL	LED	DUAL-LITE #LCSGWE-XC	STD		LED	1	120	SINGLE FACE EXIT SIGN, GREEN LED, WHITE FACE, WHITE HOUSING, SELF-CONTAINED BATTERY PACK.
F	CLG	FL	PRUDENTIAL #P-902-48CTE-PRA-120	STD	2	F32T8-SP41	62	120	SAME AS TYPE "B" EXCEPT WITH ONE 2-LAMP ELECTRONIC BALLAST AND 4FT LONG.
G	CLG	FL	KENALL #24-30-38W2b-120/HPF	STD	1	F26bBX/SPX41	30	120	EXTERIOR SURFACE MTD COMPACT FL, 1-LAMP FIXTURE.
H	CLG	FL	PRUDENTIAL #PWG-101-96CTE-120	STD	2	F32T8/SP41	30	120	FLUOR. STRIP FIXTURE, 8FT LONG WITH WIRE GUARD.
H1	CLG	FL	PRUDENTIAL #PWG-101-48CTE-120	STD	1	F32T8/SP41	30	120	SAME AS TYPE "H" EXCEPT W/ 1-LAMP & 4 FT LONG.
J	CLG	FL	METALUS VRVT2-232-DR-100-120-EB22	STD	2	F32T8/SP41	62	120	SURFACE MOUNTED FIXTURE, WEATHERPROOF W/ VANDAL RESISTANCE DIFFUSER.
J1	CLG	FL	METALUS VRVT2-232-DR-100-120-EB22-EL4	STD	2	F32T8/SP41	62	120	SAME AS TYPE "J" EXCEPT W/ SELF-CONTAINED EMERG. POWER PACK.

CONSTRUCTION NOTES

1. DEMOLISH/PATCH/REPAIR/REPLACE AS REQUIRED, ALL EXISTING CONSTRUCTION, FINISHES, LANDSCAPING, AND SITE CONSTRUCTION AFFECTED BY NEW WORK TO MATCH EXISTING ADJACENT CONSTRUCTION COMPLETE. PREPARE & PAINT AFFECTED SURFACES AS REQUIRED, ENTIRE SURFACE PLANE, UNLESS NOTED OTHERWISE.
2. EXISTING ARCHITECTURAL, STRUCTURAL, MECHANICAL, ELECTRICAL, CIVIL, OR LANDSCAPE COMPONENTS INCLUDING BUT NOT LIMITED TO SITE PAVING, CURBS, CONCRETE WALKWAYS, PLANTERS/PLANTING/TREES, AND UNDERGROUND UTILITIES TO REMAIN UNLESS NOTED OTHERWISE. COMPONENTS TO REMAIN WHICH ARE REMOVED BY CONTRACTOR IN THE PERFORMANCE OF THE SCOPE OF WORK FOR ANY REASON ARE TO BE REPLACED TO MATCH EXISTING AT CONTRACTOR'S EXPENSE.
3. PATCH AND REPAIR SUBSTRATE AND/OR FINISHES TO MATCH EXISTING WHERE EACH MECHANICAL, ELECTRICAL OR ARCHITECTURAL COMPONENT IS REMOVED, ADDED OR REPLACED.
4. REMOVE, STORE, CLEAN AND PROTECT EXISTING FURNISHINGS, EQUIPMENT, CABINETS, ETC. AS REQUIRED TO PERFORM SCOPE OF WORK. PATCH, REPAIR, PAINT, REINSTALL OR REPLACE AS REQUIRED TO MATCH EXISTING.
5. VERIFY ALL PAINT COLOR SELECTIONS WITH DISTRICT PROJECT MANAGER PRIOR TO APPLICATION.
6. CORE DRILL/SAWCUT/DISPOSE/TRENCH EXISTING ASPHALT PAVING, CONCRETE PAVING, GRADE AND BUILDING/SITE CONSTRUCTION AS REQUIRED FOR NEW SCOPE OF WORK AS SHOWN ON DRAWINGS. PATCH, REPAIR, REPLACE & PAINT ASPHALT PAVING, CONCRETE PAVING, GRADE AND BUILDING/SITE CONSTRUCTION AS REQUIRED TO MATCH EXISTING, FLUSH WITH ADJACENT EXISTING CONDITION, SEE SPECIFICATIONS. PROVIDE RE-STRIPING AND/OR MODIFY AS REQUIRED TO ACCOMMODATE NEW CONSTRUCTION. VERIFY NEW STRIPING WITH DISTRICT PROJECT MANAGER PRIOR TO APPLICATION.
7. CUT, CAP AND MODIFY EXISTING IRRIGATION SYSTEM AND REMOVE PLANTING AS REQUIRED BY NEW CONSTRUCTION. REPLANT TO PREVIOUS CONDITION.
8. DRILL/DIG/TRENCH AS REQUIRED AT EACH PLANTING AREA TO PERFORM SCOPE OF WORK. REPLACE EXISTING GROUND AND GROUND COVER TO MATCH EXISTING.
9. SUCCESSFUL BIDDER SHALL REQUEST THE DISTRICT TO FURNISH A SET OF AVAILABLE "RECORD DRAWINGS".* CONTRACTOR SHALL USE DRAWINGS AS GENERAL GUIDELINE TO GENERALLY LOCATE EXISTING UNDERGROUND UTILITY LINES (ELECTRIC CONDUITS, PIPING, SPRINKLER LINES, SEWER LINES, ETC.). CONTRACTOR SHALL VERIFY EXACT LOCATION OF ALL LINES IN FIELD PRIOR TO TRENCHING. USE ELECTRONIC LOCATING DEVICES, USE DIG ALERT SERVICE, ETC. INCLUDE THIS LOCATING WORK IN BID. BE RESPONSIBLE FOR REPAIRING ANY DAMAGED LINES.
10. SEAL AND CAULK AS REQUIRED AT ALL PENETRATIONS.
11. PERFORM THE NECESSARY DEMOLITION WORK WITH GREAT CARE AND WITH SMALL TOOLS IN ORDER NOT TO JEOPARDIZE EXISTING STRUCTURE AND EQUIPMENT TO REMAIN.
12. USE HAND TOOLS TO REMOVE SOIL, PAVING AND OTHER CONSTRUCTION WORK, WITHIN 15 INCHES OF EXISTING BUILDINGS.
13. IF STRUCTURAL MEMBERS NOT INDICATED TO BE REMOVED ARE INTERFERING WITH NEW CONSTRUCTION, OBTAIN WRITTEN AUTHORIZATION FROM ENGINEER BEFORE REMOVING SUCH MEMBERS.
14. COORDINATE THE DEMOLOTION WORK AND NEW CONSTRUCTION TO PERMIT CONTINUED OPERATION OF ALL FACILITIES NECESSARY TO BE KEPT IN OPERATION.
15. REMOVE EXISTING CONSTRUCTION TO THE BASE OF MATERIALS TO THE EXTENT NECESSARY FOR THE INSTALLATION OF NEW WORK.

GENERAL NOTES

1. CONSULT WITH THE DISTRICT'S ELECTRICAL INSPECTOR BEFORE STARTING WORK.
2. ALL EXPOSED CONDUITS AND BOXES SHALL BE PAINTED TO MATCH THE SURFACES WHERE INSTALLED.
3. COORDINATE THE ELECTRICAL WORK WITH THE WORK OF OTHER TRADES.
4. ALL TRENCHES OUTSIDE OF THE BARRICADE LIMITS SHALL BE BACKFILLED AND PAVED NOT LATER THAN 72 HOURS AFTER BEING OPENED. DURING THE TIME THE TRENCHES ARE OPEN IN TRAFFIC AREAS, THE CONTRACTOR SHALL PROVIDE TRAFFIC PLATES.
5. WHERE EXISTING STRUCTURAL WALLS ARE CORED FOR NEW CONDUIT RUNS, SEPARATION BETWEEN CORED HOLES SHALL BE THREE INCHES FROM NEW OR EXISTING HOLES, UNLESS DIRECTED OTHERWISE BY THE ENGINEER.
6. ALL ELECTRICAL EQUIPMENT SHALL BE BRACED OR ANCHORED TO RESIST A HORIZONTAL FORCE ACTING IN ANY DIRECTION USING THE FOLLOWING CRITERIA:

   FIXED EQUIPMENT ON GRADE — 20% OF OPERATING WEIGHT
   FIXED EQUIPMENT ON STRUCTURE — 40% OF OPERATING WEIGHT

   FOR FLEXIBLE MOUNTED EQUIPMENT USE 4X THE ABOVE VALUES. SIMULTANEOUS VERTICAL FORCE USE 1/3X HORIZONTAL FORCE. WHERE ANCHORAGE DETAILS ARE NOT SHOWN ON DRAWINGS THE FIELD INSTALLATION SHALL BE SUBJECT TO THE APPROVAL OF THE STRUCTURAL ENGINEER AND THE OSA FIELD ENGINEER.
7. THE REPRESENTATION OF PHYSICAL PLACEMENT OF EXISTING CONDUITS HAS BEEN DEVELOPED FROM THE BEST INFORMATION AVAILABLE TO THE DISTRICT AT THE TIME THE DRAWINGS WERE PREPARED. THE DISTRICT PROVIDES THIS ONLY AS A GENERAL GUIDELINE FOR THE CONVENIENCE OF BIDDERS/CONTRACTORS AND DOES NOT GUARANTEE OR WARRANT IN ANY WAY EXPRESSLY OR IMPLIEDLY, THE ACCURACY OF THESE REPRESENTATIONS. NOTHING IN THIS DISCLAIMER AFFECTS IN ANY WAY THE DUTY OF THE CONTRACTOR TO FURNISH ACCURATE "AS BUILT" DRAWINGS AFTER THE COMPLETION OF THE CONTRACT.
8. ALL FEEDERS AND BRANCH CIRCUITS INSTALLED UNDERGROUND AND EXPOSED OUTDOOR SHALL CARRY A GROUND WIRE, SIZED AS PER N.E.C.
9. ALL UNDERGROUND CONDUITS SHALL BE ENTIRELY ENCASED IN CONCRETE 3" THICK ON ALL SIDES WITH MULTIPLE CONDUITS SPACED NOT LESS THAN 2" APART. MINIMUM DEPTH OF NOT LESS THAN 24" BELOW FINISHED GRADE TO THE TOP OF CONCRETE ENVELOPE.
10. INCLUDE ALL NECESSARY DEMOLITION AS PART OF THIS WORK.
12. QUANTITY OF WIRES SHOWN IN ALL CONDUITS IS FOR GENERAL GUIDELINE. SUPPLIER OF AUXILIARY SYSTEM (FA, INTERCOM/PA, TEL, SECURITY) SHALL PREPARE CONSTRUCTION DRAWINGS SHOWING ALL NECESSARY WIRES AND CABLES AND VERIFY SIZES OF ALL CONDUITS SHOWN. PROVIDE ALL SPARE WIRES BETWEEN BUILDINGS.
13. DRAWINGS DO NOT SHOW ALL THE NECESSARY J-BOXES AND PULL BOXES WHICH WILL BE REQUIRED THROUGHOUT. IT IS THE CONTRACTOR'S RESPONSIBILITY TO PROVIDE ALL THESE BOXES AS NECESSARY TO TERMINATE CONDUITS AND RACEWAYS. PAINT BOXES TO MATCH COLOR OF THE FINISHED SURFACE THAT THE BOXES ARE ATTACHED TO.
14. ALL JUNCTION BOXES AND DEVICES INDICATED ON BUILDING EXTERIORS SHALL BE WEATHERPROOF TYPE.
15. FIRE ALARM WIRES SHALL BE COPPER TYPE THWN/THHN.
16. ALL SIGNAL WIRING IN UNDERGROUND CONDUITS SHALL BE WET LOCATION TYPE.
17. EXISTING ROUTING OF CONDUIT FOR PA SYSTEM SHOWN ON PLANS ARE APPROXIMATE ONLY. FIELD VERIFY EXACT ROUTING.

CABLE TYPE

"S" CABLE – "WEST PENN" NO. 240, 2 PAIR #22 – SECURITY ZONE & POWER FEED.
"SW" CABLE – "WEST PENN" NO. 240, 2 PAIR #22 SECURITY ZONE & POWER FEED.
"SC" CABLE – "WEST PENN" NO. AQ 240, 4#22 – SECURITY COMM. BUS.
"A" CABLE – "WEST PENN" NO. 355, 1 PAIR SHIELDED & 1 PAIR UNSHIELDED #22 – TEL/PA.
"AW" CABLE – "WEST PENN" NO. 355, 1 PAIR SHIELDED & 1 PAIR UNSHIELDED #22 – TEL/PA
"B" CABLE – "WEST PENN" NO. 293, 1 PAIR #18 SHIELDED – EXTERIOR SPEAKER CABLE.
"BW" CABLE – "WEST PENN" NO. 293, 1 PAIR #18 SHIELDED – EXTERIOR SPEAKER CABLE
"T" CABLE – 4 PAIR #24 UTP CATEGORY 5 CABLE.
"TW" CABLE – 4 PAIR #24 UTP CATEGORY 5 CABLE(WET LOCATION).
"SP" CABLE – "WEST PENN" NO. 293(1 PAIR SHIELDED) – SOUND SYSTEM OVERRIDE.
"D" CABLE – 4 PAIR #24 UTP CATEGORY 5 CABLE.
"DW" CABLE – 4 PAIR #24 UTP CATEGORY 5 CABLE FLOODED TYPE AS MANUFACTURED BY COMSCOPE (UNDERGROUND).
"DFO" CABLE – FIBER OPTIC, 12 FIBERS MULTIMODE AND 6 FIBERS SINGLE MODE.
"TV" CABLE – RG6 TV CABLE. USE FLOODED TYPE IN UNDERGROUND CONDUIT.
"JA412" CABLE – TV CABLE. USE FLOODED TYPE IN UNDERGROUND CONDUIT.
"RG11" CABLE – RG11 TV CABLE. USE FLOODED TYPE IN UNDERGROUND CONDUIT.
"M" CABLE – WEST PENN NO. 291, 1 TWISTED PAIR #22 SHIELDED(MICROPHONE).
"AM" CABLE – BELDEN #8241.
"FM" CABLE – BELDEN #8241.

REGISTERED PROFESSIONAL ENGINEER — A. DANNY NG — No. E9130 — Exp. 6/30/2001 — ELECTRICAL — STATE OF CALIFORNIA

PACIFIC ENGINEERS GROUP
Consulting Electrical Engineers
11028 Victory Boulevard, Suite 201
North Hollywood, Ca. 91606-3720
(213) 877-5304 (818) 763-9189
FAX (818) 763-9180

SYMBOL LIST, FIXTURE SCHEDULE & NOTES

CARMICHAEL-KEMP ARCHITECTS AIA

REGISTERED PROFESSIONAL ENGINEER — JAMES E. SHAFFER — No. C-20592 — Exp. 12-31-99 — ELECTRICAL — STATE OF CALIFORNIA

IDENTIFICATION STAMP DIV. OF THE STATE ARCHITECT OFFICE OF REGULATION SERVICES
APP. NO 4-101516
A.C. FILE
DATE DEC 14 1999

NEW SCIENCE BUILDING at MT. MIGUEL HIGH SCHOOL
1800 Sweetwater Road, Spring Valley, CA 91977
GROSSMONT UNION HIGH SCHOOL DISTRICT

JOB NO. 9822-1
DATE 12-14-99
SHEET NUMBER E-101
BIDDING ORDER 71 OF 82

IN THE PRECAST CONCRETE PULL BOX, FURNISH AND INSTALL CABLE RACKS ON WALLS INDICATED. EACH RACK SHALL BE EQUIPPED WITH THREE (3) PORCELAIN CABLE HOLDERS ON A VERTICAL STEEL MOUNTING BAR, BOLT HOLES SHALL BE PRECAST. PULL BOX SHALL BE QUIKSET UTILITY VAULT SERIES TFB-1001 OR EQUAL WITH STAINLESS STEEL FLATHEAD SCREWS AND SELF CLEANING HOLES . LOOP ALL CABLES AROUND THE LONGEST LENGTH IN THE PULL BOX.

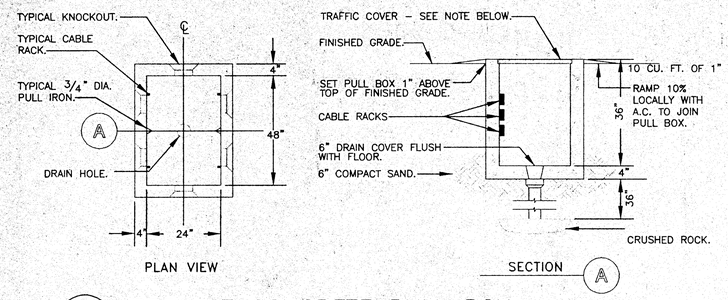

1 / E-102 PRECAST CONCRETE PULL BOX

N.T.S.

NOTE: DETAIL SHOWS TYPICAL PULL BOX DETAIL. REFER TO DRAWINGS FOR EXACT SIZES OF PULL BOXES.

TRAFFIC PLATE NOTE

TOP OF STEEL PLATE SHALL HAVE A MINIMUM COEFFICEINT OF STATIC FRICTION OF 0.5 FOR EITHER WET OR DRY CONDITIONS, WHEN TESTED FOR ANT SHOE SOLE MATERIAL. TESTING AND CERTIFICATION OF THE FRICTION FACTOR SHALL BE CONDUCTED BY AN INDEPENDENT LABORATORY APPROVED BY THE ENGINEER UNDER THE DIRECITON OF A REGISTERED CIVIL OR QUALITY ENGINEER. TESTING SHALL CONFORM TO ASTM D-2407 OR F-489 OR F-609 OR OTHER PROCEDURE APPROVED BY THE ENGINEER.

A STEEL PLATE CALLED "ALGRIP" AND MANUFACTURED BY SAFE-WALK, INC., HAS BEEN DETERMINED TO SATISFY THE REQUIREMENTS OF S047-1182. THEIR LOCAL DISTRIBUTOR IS GRATING PACIFIC, INC. LOCATED AT 4839 PATATA ST., CUDAHY, CALIF. 90201. TELEPHONE (213) 771-4314, ATTENTION: MR. JEFF ROBERTSON. IN USING THIS PRODUCT THE NOTES SHALL SPECIFY THAT THE STEEL SHALL BE GALVANIZED PER SECTION 210-3 OF THE STANDARD SPECIFICATIONS.

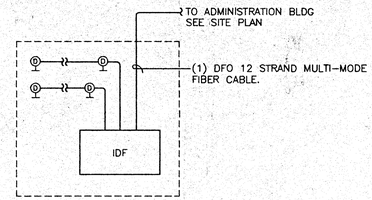

COMPUTER/DATA BLOCK DIAGRAM

1. FOR DEVICE QUANTITIES AND LOCATIONS, CONDUIT & WIRE SIZES SEE FLOOR PLAN
2. FOR EACH DATA OUTLET PROVIDE(1) UTP CAT 5 DATA CABLE TO DATA RACK, RUN DATA CABLES IN CONDUIT TO DATA RACK.
3. DFO CONSISTS OF (1) FIBER CABLE WHICH HAS 12 STRAND MULTI-MODE AND 6 STRAND SINGLE-MODE FIBERS.

2 / E-102 DATA NETWORK

SINGLE LINE DIAGRAM

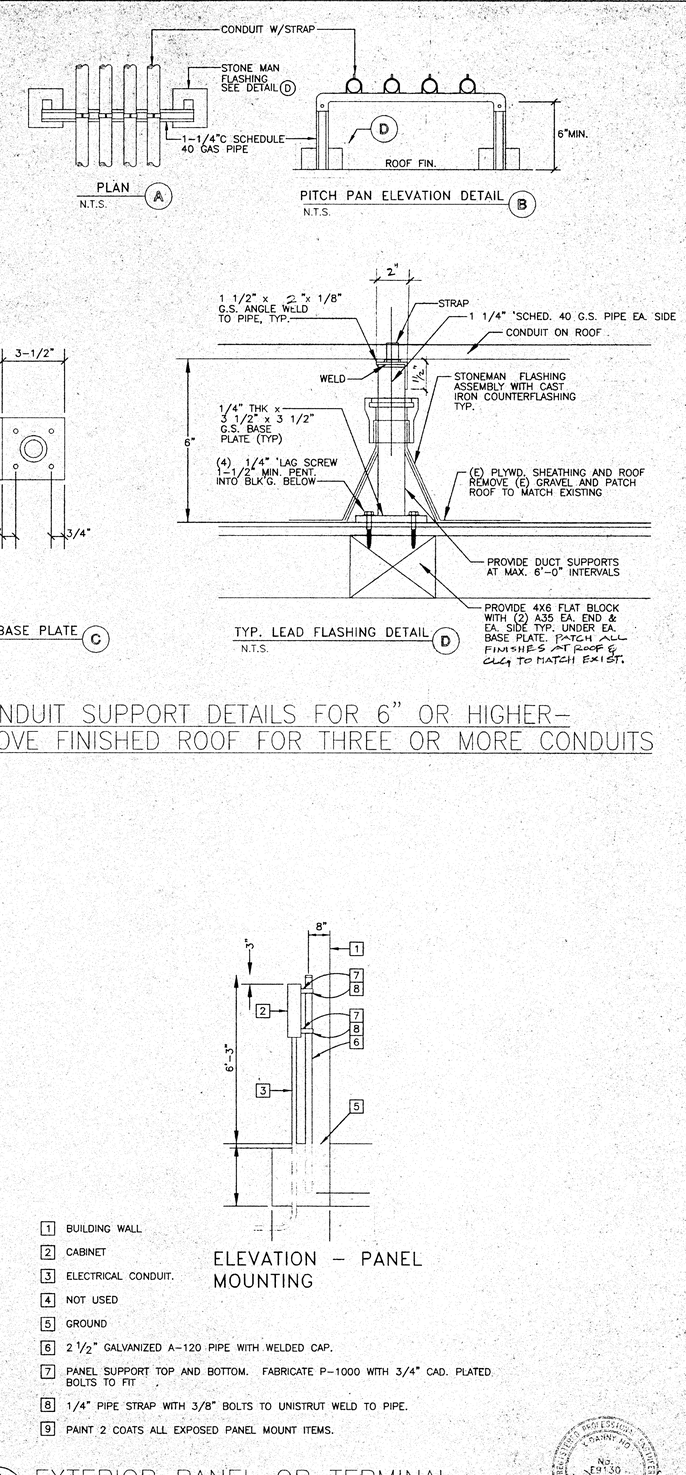

3 / E-102 CONDUIT SUPPORT DETAILS FOR 6" OR HIGHER- ABOVE FINISHED ROOF FOR THREE OR MORE CONDUITS

N.T.S.

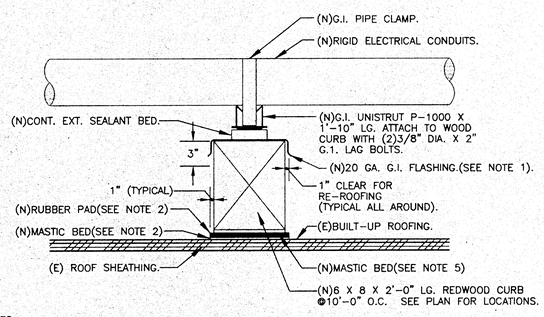

NOTES:

1. SOLDER ALL JOINTS AND HEM ALL EDGES OF FLASHING IN SHOP(TYP.).
2. FURNISH AND INSTALL 3/4" THICK RUBBER PAD(SEE LIST OF MANUFACTURER BELOW UNDER REDWOOD CURB. PAD SHALL BE 1" WIDER FROM FACE OF CURB ALL AROUND. SET RUBBER PAD ON (E) ROOF AS FOLLOWS:
   a. FOR ROOF PITCH IS GREATER THAN 1:12, SET RUBBER PAD IN BED OF NON-ASBESTOS ELASTOMERIC ROOF CEMENT.
   b. FOR FLAT ROOFM NON-ASBESTOS ELASTOMERIC ROOF CEMENT IS NOT REQUIRED.
3. SET REDWOOD CURB ON RUBBER PAD IN BED OF NON-ASBESTOS ELASTOMERIC ROOF CEMENT.

LIST OF APPROVED MATERIALS AND MANUFACTURER:
- "DUP-PAD" BY W.R. MEADOWS OF SOUTHERN CALIFORNIA.
- "ROOF GUARD" BY HUMANNE CO., WISCONSIN.
- OR APPROVED EQUAL.

4 / E-102 WOOD CURB AND ELECTRICAL CONDUIT(S) INSTALLATION DETAILS ON EXISTING ROOFS

N.T.S.

ELEVATION - PANEL MOUNTING

1. BUILDING WALL
2. CABINET
3. ELECTRICAL CONDUIT.
4. NOT USED
5. GROUND
6. 2 1/2" GALVANIZED A-120 PIPE WITH WELDED CAP.
7. PANEL SUPPORT TOP AND BOTTOM. FABRICATE P-1000 WITH 3/4" CAD. PLATED BOLTS TO FIT .
8. 1/4" PIPE STRAP WITH 3/8" BOLTS TO UNISTRUT WELD TO PIPE.
9. PAINT 2 COATS ALL EXPOSED PANEL MOUNT ITEMS.

5 / E-102 EXTERIOR PANEL OR TERMINAL CABINET MOUNTING DETAIL

N.T.S

PACIFIC ENGINEERS GROUP
Consulting Electrical Engineers
11028 Victory Boulevard, Suite 201
North Hollywood, Ca. 91606-3720
(213) 877-5304 (818) 763-9189
FAX (818) 763-9180

ELECTRICAL DETAILS

CARMICHAEL-KEMP ARCHITECTS AIA
2870 LOS FELIZ PLACE • LOS ANGELES • 213 663 1263

NEW SCIENCE BUILDING at MT. MIGUEL HIGH SCHOOL
1800 Sweetwater Road, Spring Valley, CA 91977
GROSSMONT UNION HIGH SCHOOL DISTRICT

JOB NO.	9822-1
DATE:	12-14-99
SHEET NUMBER	E-102
SHEET ORDER	72 OF 82

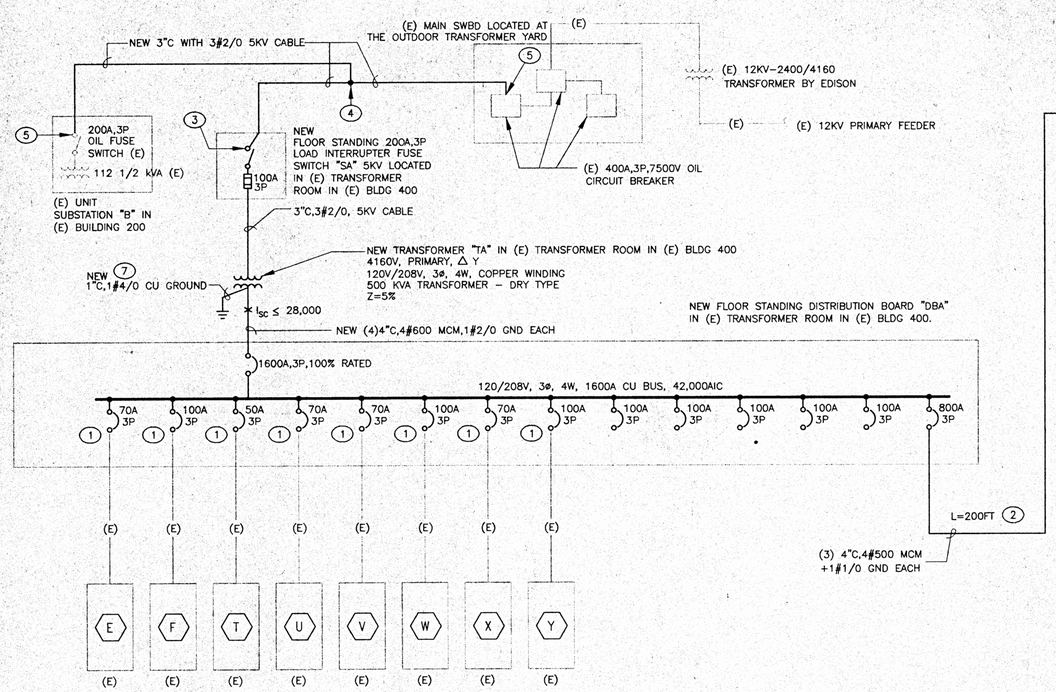

DIAGRAM C
ELECTRICAL SINGLE LINE

GENERAL NOTES

1. SEE E-201 FOR UNDERGROUND CONDUITS ROUTING AND MANHOLE LOCATIONS.
2. FOR CLARITY, MAN HOLES NOT SHOWN.

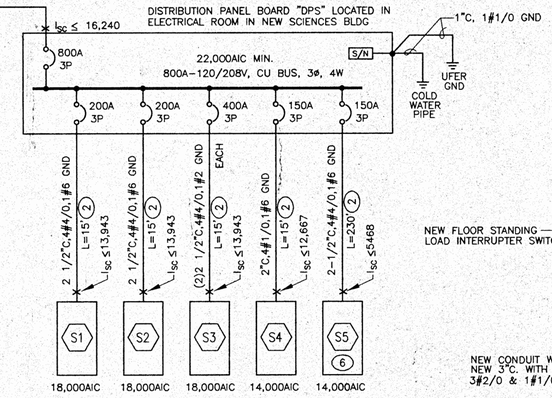

KEYED NOTES

1. RE-CONNECT (E) FEEDER TO (N) EQUIPMENT. PROVIDE PIGTAIL WITH COMPRESSION FITTINGS ON EXISTING CABLES AS NECESSARY.
2. CALCULATION ONLY. DO NOT USE FOR BID & CONSTRUCTION.
3. CONNECT NEW CABLES IN CONDUIT TO NEW EQUIPMENT.
4. PROVIDE CABLE SPLICE WITHIN MANHOLE MOUNT SPLICE ON A UNISTRUT ON THE WALL.
5. CONNECT NEW CABLES IN CONDUIT TO EXISTING EQUIPMENT.
6. PANELBOARD LOCATED IN BUILDING 500.
7. PROVIDE ADDITIONAL 1"C, 1#4/0 CU GROUND TO COLD WATER PIPE 2" AND ABOVE FROM THE GND WIRE.
8. USE 5/8"ø THREADED ROD ANCHOR IN 3" HOLE W/HILTI HIT HY-150 ADHESIVE AT EACH CORNER (4 TOTAL PER PIECE OF EQUIPMENT) ICBO #5193.

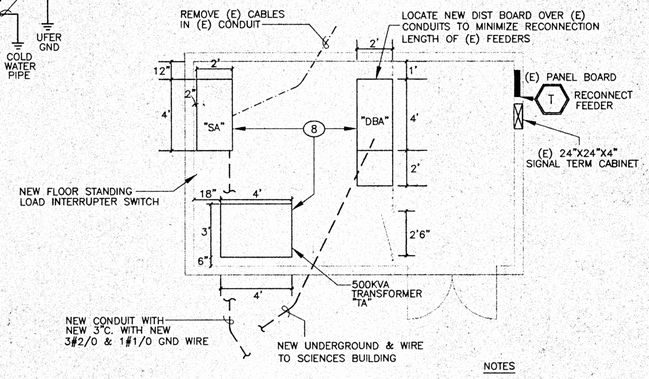

NOTES

1. PROVIDE GROUND WIRE AND MAKE ALL GROUND CONNECTIONS FOR TRANSFORMER AND DISTRIBUTION BOARD.
2. GROUND FENCES AND GATES.
3. SEE E-201 FOR CONTINUATION.

DIAGRAM D
ELECTRICAL FLOOR PLAN IN BLDG 400

1/4"=1'-0"

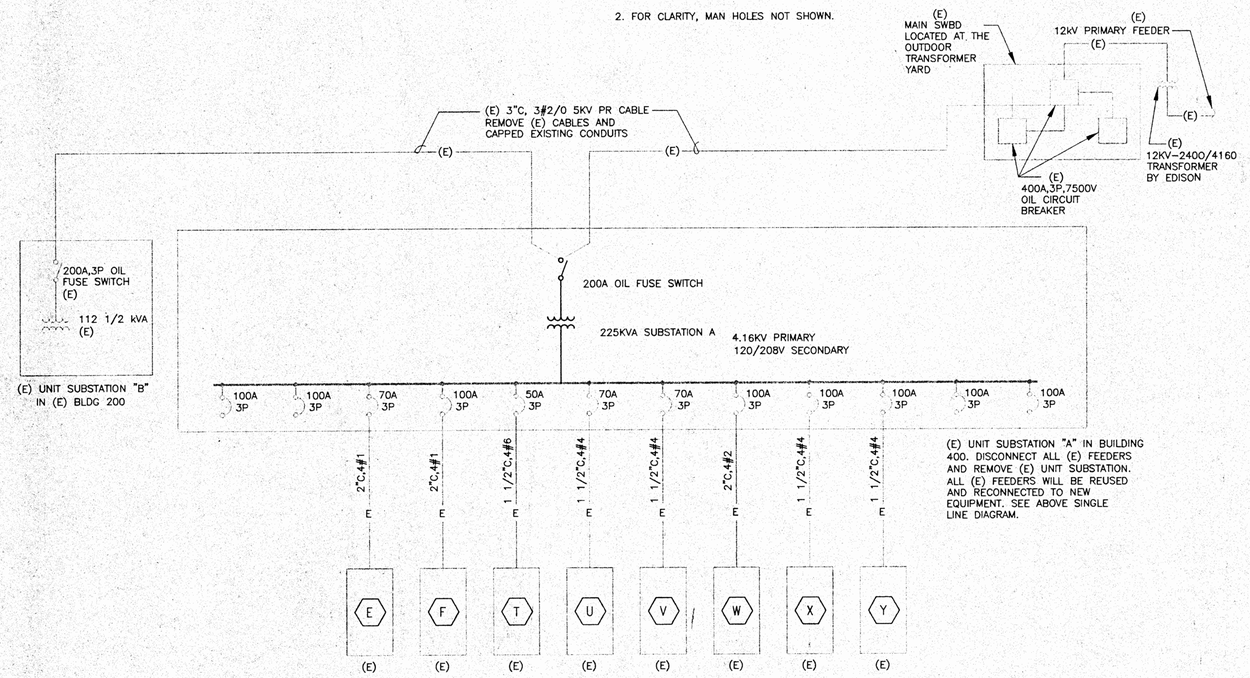

DIAGRAM B
DEMOLITION SINGLE LINE

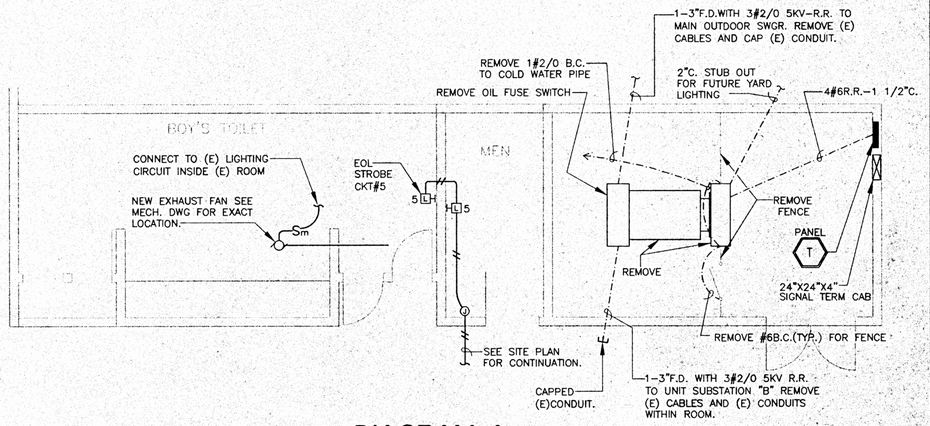

DIAGRAM A
DEMOLITION FLOOR PLAN UNIT SUBSTATION A IN BLDG 400 NEW FIRE ALARM/POWER PLAN FOR TOILET

1/4"=1'-0"

PACIFIC ENGINEERS GROUP
Consulting Electrical Engineers
11028 Victory Boulevard, Suite 201
North Hollywood, Ca. 91606-3720
(213) 877-5304 (818) 763-9189
FAX (818) 763-9180

CARMICHAEL-KEMP ARCHITECTS A.I.A.
5670 LOS FELIZ AT ZANE • LOS ANGELES • (213) 663-1205

NEW SCIENCE BUILDING at MT. MIGUEL HIGH SCHOOL
1800 Sweetwater Road, Spring Valley, CA 91977
GROSSMONT UNION HIGH SCHOOL DISTRICT

ELECTRICAL SINGLE LINE DIAGRAM

JOB NO.	9822-1
DATE:	12-14-99
SHEET NUMBER	E-103
BINDING ORDER	75 OF 82

225 AMP BUS, 120/208 VOLT, 3-PHASE, 4-WIRE, SURFACE MOUNTED

PANEL SCHEDULE S1

CKT NO.	CKT BKR AMP	CKT BKR P	OUTLETS LT	OUTLETS REC	OUTLETS MSC	WATTS PH-A	WATTS PH-B	WATTS PH-C	
1	20	1		4		1200			CHEM/PHYSICS
2	20	1		6		1800			CHEM/PHYSICS
3	20	1		6			1800		CHEM/PHYSICS
4	20	1		6			1800		CHEM/PHYSICS
5	20	1		6				1800	CHEM/PHYSICS
6	20	1		6				1800	SCIENCE #1
7	20	1		6		1800			SCIENCE #1
8	20	1		5		1500			SCIENCE #1
9	20	1		6			1800		SCIENCE #1
10	20	1		4			1200		SCIENCE #1
11	20	1		5				1500	SCIENCE #1
12	20	1		6				1800	SCIENCE #2
13	20	1		4		1200			SCIENCE #2
14	20	1		6		1800			SCIENCE #2
15	20	1		5			1500		SCIENCE #2
16	20	1		5			1500		SCIENCE #2
17	20	1		5				1500	SCIENCE #2
18	20	1		3				1200	OFFICES
19	20	1		6		1800			PREP ROOM
20	20	1		4		1200			OFFICES, CORRIDOR
21	20	1		6			1800		OFFICES, PREP ROOM
22	20	1		4			1200		OFFICES, CORRIDOR
23	20	1		6				1800	OFFICES, PREP ROOM
24	20	1		3				900	OFFICES, LAB #2
25	20	1			1	500			REFRIGERATOR
26	20	1		5		1500			OFFICES, LAB
27	20	1		2			680		REFRIGERATOR RECS
28	20	1		5			1500		OFFICES, LAB
29	20	1		2				360	OFFICES
30	20	1		2				360	CHEM/PHYSICS
31	20	1		3		540			PREP ROOM
32	20	1		2		360			CHEM/PHYSICS
33	20	1		3			540		PREP ROOM
34	20	1			3		1200		TV OUTLETS
35	20	1			1			300	IRRAG. CONTROLLER
36	20	1		4				624	PREP. ROOM
37	20	1			4	500			FA CONTACTORS
38					SPC				SPACE
39					SPC				SPACE
40					SPC				SPACE
41					SPC				SPACE
42					SPC				SPACE
TOTAL						15700	16520	13944	46164 W.

LONG CONTINUOUS LOAD 0 X 1.25 = 0 W.
OTHER LOAD = 46164 W.
TOTAL LOAD = 46164 W.
AMPS AT 120/208V, 3-PHASE = 128.2 A.

* PROVIDE GFI BREAKER.

225 AMP BUS, 120/208 VOLT, 3-PHASE, 4-WIRE, SURFACE MOUNTED

PANEL SCHEDULE S2

CKT NO.	CKT BKR AMP	CKT BKR P	OUTLETS LT	OUTLETS REC	OUTLETS MSC	WATTS PH-A	WATTS PH-B	WATTS PH-C	
1	20	1		6		1800			CHEMISTRY
2	20	1		6		1800			CHEMISTRY
3	20	1		6			1800		CHEMISTRY
* 4	20	1		5			1500		CHEMISTRY
5	20	1		5				1500	CHEMISTRY
6	20	1		5				1500	CHEMISTRY
7	20	1		5		1500			CHEMISTRY
8	20	1		4		1200			SCIENCE #4
* 9	20	1		6			1800		SCIENCE #4
10	20	1		7			2100		SCIENCE #4
* 11	20	1		6				1800	SCIENCE #4
12	20	1		4				1200	SCIENCE #4
* 13	20	1		6		1800			OFFICES, SCIENCE #4
* 14	20	1		4		1200			SCIENCE #3
* 15	20	1		6			1800		SCIENCE #3
* 16	20	1		4			1200		SCIENCE #3
* 17	20	1		6				1800	SCIENCE #3
* 18	20	1		6				1800	SCIENCE #3
19	20	1		6		1800			SCIENCE #3
* 20	20	1			1	500			FUME HOOD
21	20	1			1		500		FA XPONDER
22	20	1		4			1200		SCIENCE #3
23	20	1			1			300	CLOCK XPONDER
24	20	1			1			500	SECURITY SYSTEM PWR
25	20	1			1	500			DATA RACK
* 26	20	1		3		540			CHEMISTRY
27	20	1			3		1200		TV OUTLETS
* 28	20	1		3			540		CHEMISTRY
29	20	1		3				540	OFFICE
30	20	1		3				540	SCIENCE #4
31	20	1		4		620			SCIENCE #4
32	20	1			6	750			FA CONTACTORS
33					SPC				SPACE
34					SPC				SPACE
35					SPC				SPACE
36					SPC				SPACE
37					SPC				SPACE
38					SPC				SPACE
39					SPC				SPACE
40					SPC				SPACE
41					SPC				SPACE
42					SPC				SPACE
TOTAL						14010	13640	11480	39130 W.

LONG CONTINUOUS LOAD 0 X 1.25 = 0 W.
OTHER LOAD = 39130 W.
TOTAL LOAD = 39130 W.
AMPS AT 120/208V, 3-PHASE = 108.7 A.

* PROVIDE GFI BREAKER.

400 AMP BUS, 120/208 VOLT, 3-PHASE, 4-WIRE, SURFACE MOUNTED

PANEL SCHEDULE S3

CKT NO.	CKT BKR AMP	CKT BKR P	OUTLETS LT	OUTLETS REC	OUTLETS MSC	WATTS PH-A	WATTS PH-B	WATTS PH-C	
1	50	3				4642			AC-1
2	50	3			1	4642			AC-2
3	–	–					4642		– –
4	–	–					4642		– –
5	–	–						4642	– –
6	–	–						4642	– –
7	50	3			1	4642			AC-3
8	50	3			1	4642			AC-4
9	–	–					4642		– –
10	–	–					4642		– –
11	–	–						4642	– –
12	–	–						4642	– –
13	50	3			1	4642			AC-5
14	50	3			1	4642			AC-6
15	–	–					4642		– –
16	–	–					4642		– –
17	–	–						4642	– –
18	–	–						4642	– –
19	20	1							SPARE
20	50	3			1	4642			AC-7
21	20	1		4					ROOF OUTLET
22	–	–					4642		– –
23	20	1			3		300		J-BOX FOR HVAC CONTROL
24	–	–						4642	– –
25	20	1			4			400	J-BOX FOR HVAC CONTROL
26	20	1			1	500			EF-1
27	20	1			1	500			EF-1
28	20	1			1		500		EF-1
29	20	1			1		500		EF-1
30	20	1			1			500	EF-1
31	20	1			1			500	EF-3
32	20	1			1	500			EF-2
33	20	1			SPR				SPARE
34	15	2			1		1000		CU-1
35	20	1			1		500		CU-1 HEATER
36	–	–			1			1000	– –
37	20	1			1			500	EF-1
38									
39									
40									
41									
42									
TOTAL						33994	35294	35394	104682 W.

LONG CONTINUOUS LOAD 0 X 1.25 = 0 W.
OTHER LOAD = 104682 W.
TOTAL LOAD = 104682 W.
AMPS AT 120/208V, 3-PHASE = 290.8 A.

225 AMP BUS, 120/208 VOLT, 3-PHASE, 4-WIRE, SURFACE MOUNTED

PANEL SCHEDULE S4

CKT NO.	CKT BKR AMP	CKT BKR P	OUTLETS LT	OUTLETS REC	OUTLETS MSC	WATTS PH-A	WATTS PH-B	WATTS PH-C	
* 1	20	1	11			1364			CHEMISTRY 104
2	20	1	11			1364			CHEM/PHYSICS 101
* 3	20	1	11				1364		CHEMISTRY 104
4	20	1	11				1364		CHEM/PHYSICS 101
* 5	20	1	8					1408	PREP ROOM
6	20	1	6					1056	PREP ROOM/OFFICES
* 7	20	1	8			1408			PREP ROOM
* 8	20	1		SPR					SPARE
* 9	20	1	11				1240		SCIENCE 106
10	20	1	12				1496		SCIENCE 104
* 11	20	1	11					1240	SCIENCE 106, WOMEN
* 12	20	1	12					1496	SCIENCE 104
* 13	20	1	10			1240			SCIENCE 111
* 14	20	1	10			1240			SCIENCE 114
* 15	20	1	10				1240		SCIENCE 111
16	20	1	10				1240		SCIENCE 114
* 17	20	1		1				830	EF-4
18	20	1		1				830	EF-5
19	20	1		1		830			EF-5
20	20	1		SPR					SPARE
21	20	1		SPR					SPARE
22	20	1		SPR					SPARE
23	20	1		SPR					SPARE
24	20	2		1				1500	WH-1
25	20	2		1		1500			WH-1
26	–	–				1500			– –
27	–	–					1500		– –
28	30	2		1			1800		WH-2
29	20	1		SPR					SPARE
30	–	–						1800	– –
31	20	1	6			1065			COVERED WALKWAY
32	20	1		1		200			TIME CLOCK
33	20	1	2				1280		EXT. LTG WALL
34	20	1	10				640		EXT. LTG. CANOPY
35	20	1	20					1280	EXT. LTG. CANOPY
36									
37									
38									
39									
40									
41									
42									
TOTAL						11711	13164	11440	36315 W.

LONG CONTINUOUS LOAD 24025 X 1.25 = 30031 W.
OTHER LOAD = 12290 W.
TOTAL LOAD = 42321 W.
AMPS AT 120/208V, 3-PHASE = 117.6 A.

* PROVIDE GFI BREAKER.

225 AMP BUS, 120/208 VOLT, 3-PHASE, 4-WIRE, SURFACE MOUNTED

PANEL SCHEDULE S5

CKT NO.	CKT BKR AMP	CKT BKR P	OUTLETS LT	OUTLETS REC	OUTLETS MSC	WATTS PH-A	WATTS PH-B	WATTS PH-C	
1	30	3			1	500			WEATHERPROOF BLDG. 500 ROOF LEVEL 150A, MAIN C/B
2	30	3			1	500			AC-501
3	–	–					500		AC-502
4	–	–					500		– –
5	–	–						500	– –
6	–	–						500	– –
7	30	3			1	500			AC-503
8	30	3			1	500			AC-504
9	–	–					500		– –
10	–	–					500		– –
11	–	–						500	– –
12	–	–						500	– –
13	35	3			1	650			AC-505
14	30	3			SPR				SPARE
15	–	–					650		– –
16	–	–							– –
17	–	–						650	– –
18	–	–							– –
19	20	1		5		900			REC OUTLETS
20	20	1				500			SIGNAL CABINET
21	20	1			SPR				SPARE
22	20	1			SPR				SPARE
23	20	1			SPR				SPARE
24	20	1			SPR				SPARE
TOTAL						4050	2650	2650	9350 W.

LONG CONTINUOUS LOAD 0 X 1.25 = 0 W.
OTHER LOAD = 9350 W.
TOTAL LOAD = 9350 W.
AMPS AT 120/208V, 3-PHASE = 26.0 A.

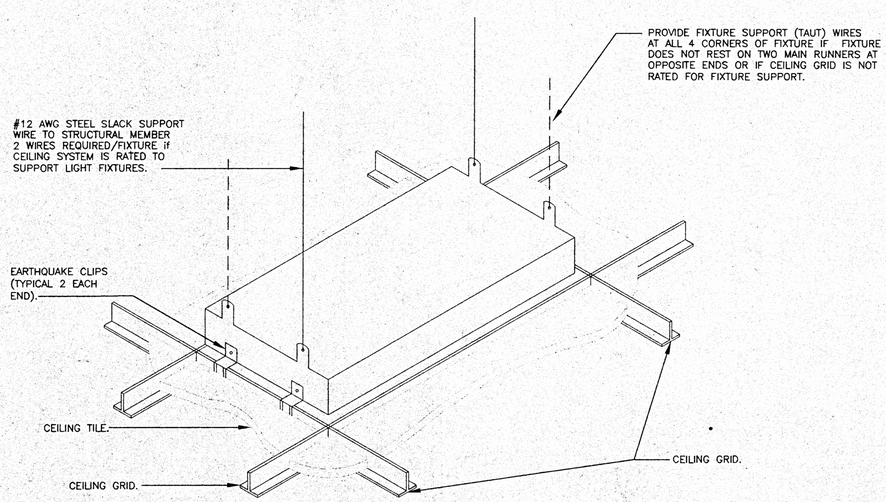

REFER TO ARCHITECTURAL DRAWINGS FOR TYPE OF CEILING GRID AND TILE SYSTEM.

1 / E-104 **LIGHTING FIXTURE SUSPENSION DETAIL GRID CEILING SYSTEM**

N.T.S.

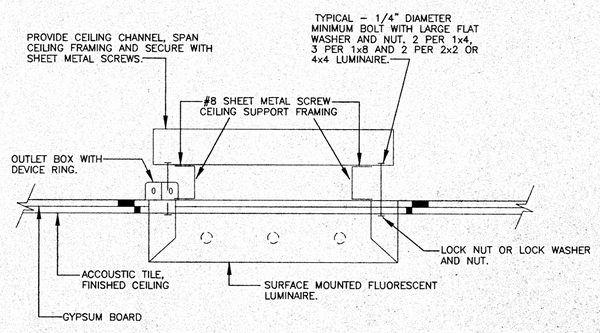

2 / E-104 **SURFACE LUMINAIRE ON GYPSUM BOARD CEILING**

NOT TO SCALE (METAL FRAMING)

PACIFIC ENGINEERS GROUP
Consulting Electrical Engineers
11028 Victory Boulevard, Suite 201
North Hollywood, Ca. 91606-3720
(213) 877-5304 (818) 763-9189
FAX (818) 763-9180

PANEL SCHEDULES

CARMICHAEL-KEMP ARCHITECTS A.I.A.
2270 CORSEL PLACE • LOS ANGELES • (213) 472-5255

NEW SCIENCE BUILDING at MT. MIGUEL HIGH SCHOOL
1800 Sweetwater Road, Spring Valley, CA 91977
GROSSMONT UNION HIGH SCHOOL DISTRICT

JOB NO. 9822-1
DATE: 12-14-99
SHEET NUMBER E-104
BIDDING ORDER 74 of 82

FIRE ALARM SYMBOLS

F OR F H	FIRE ALARM MANUAL PULL STATION PROVIDE MONITOR MODULE TO EACH DEVICE, +48".
▷F H OR ▷F (cd) (cd)	FIRE ALARM BELL WITH STORBE LIGHT, CANDELA RATING AS INDICATED. +80" TO BOTTOM OF STROBE LIGHT.
WP ▷H	EXTERIOR W.P. FIRE ALARM BELL ON W.P. BOX.
L OR L H (cd) (cd)	FIRE ALARM STROBE. MOUNT AT +80" TO BOTTOM OF STROBE. CANDELA RATING AS INDICATED.
G L H	FIRE ALARM STROBE WITH WIRE GUARD.
	ADDRESSABLE SMOKE DETECTOR, PHOTOELECTRIC TYPE.
J H	JUNCTION BOX: MOUNT +18" UNLESS NOTED OTHERWISE.
G ▷F	FIRE ALARM BELL STROBE WITH WIRE GUARD.
(cd)▷F	FIRE ALARM COMBINATION BELL STROBE. CANDELA AS NOTED ON PLANS.
H	ADDRESSABLE HEAT DETECTOR.
DD	FOUR WIRE SMOKE DUCT DETECTOR WITH RELAY BASE AND HOUSING. PROVIDE MONITOR MODULE IN 4" SQ. J-BOX AND MOUNT NEAR DUCT SMOKE DETECTOR FOR FIRE ALARM CONTROL.
———	CONDUIT: EXPOSED IN UNFINISHED AREA; CONCEALED ABOVE CEILING OR IN WALL IN FINISHED AREAS.
— · —	EXISTING CONDUIT.
A-1,3,5	HOMERUN TO PANEL "A", CIRCUITS 1, 3, 5.
- - - -	CONDUIT: IN OR BELOW FLOOR OR BELOW GRADE.
———	1/2"C,2#12 — /// — 1/2"C,3#12 — //// — 1/2"C,4#12 — //// — 1/2"C,5#12
A	PANEL DESIGNATION, LETTER IDENTIFIES THE PANEL.
(E)	EXISTING. C.O. CONDUIT ONLY WITH #12 PULL WIRE.
U.O.N.	UNLESS OTHERWISE NOTED. (N) NEW.
W.P.	WEATHERPROOF. A.F.F ABOVE FINISHED FLOOR.
FATC	FIRE ALARM TERMINAL CABINET WITH TERMINAL STRIPS.
FCPS	FIELD CHARGE POWER SUPPLY.
FACP	FIRE ALARM CONTROL PANEL.
FA ANNUN	FIRE ALARM ANNUNCIATOR PANEL.
EOL	END OF LINE RESISTOR.

FIRE ALARM CABLE AND WIRING

—F —	1/2" RACEWAY (1/2"CONDUIT OR WIREMOLD V700) WITH ONE "F" CABLE.
—F2—	1/2" RACEWAY (1/2"CONDUIT OR WIREMOLD V700) WITH ONE "F" CABLE & 2#12.
—F4—	3/4" RACEWAY (3/4"CONDUIT OR WIREMOLD 2100) WITH ONE "F" CABLE & 4#12.
—F6—	3/4" RACEWAY (3/4"CONDUIT OR WIREMOLD 2100) WITH ONE "F" CABLE & 6#12.
—F8—	3/4" RACEWAY (3/4"CONDUIT OR WIREMOLD 2100) WITH ONE "F" CABLE & 8#12.
—F10—	3/4" RACEWAY (3/4"CONDUIT OR WIREMOLD 2100) WITH ONE "F" CABLE & 10#12.
—F12—	3/4" RACEWAY (3/4"CONDUIT OR WIREMOLD 2100) WITH ONE "F" CABLE & 12#12.
———	1/2" RACEWAY (1/2"CONDUIT OR WIREMOLD V700) WITH 2#12.
— /// —	1/2" RACEWAY (1/2"CONDUIT OR WIREMOLD V700) WITH 4#12.
— /// /// —	3/4" RACEWAY (3/4"CONDUIT OR WIREMOLD 2100) WITH 6#12.
— //// //// —	3/4" RACEWAY (3/4"CONDUIT OR WIREMOLD 2100) WITH 8#12.
—FW2—	FW CABLE PLUS 2#12 THWN. —FW6— FW CABLE PLUS 6#12 THWN.
—FW4—	FW CABLE PLUS 4#12 THWN. —FW8— FW CABLE PLUS 8#12 THWN.

"F" CABLE – "WEST PENN" NO. D975, 1 PAIR #18 SHIELDED – FIRE ALARM ADDRESSABLE LOOP.

"FW" CABLE – "WEST PENN" NO. TSL294, 1 PAIR #16 SHIELDED – FIRE ALARM ADDRESSABLE LOOP (UNDERGROUND).

CODES, STANDARDS & GUIDES

CODES:

1998 Building Standards Administrative Code, Part 1, Title 24 C.C.R.
1998 California Building Code (CBC), Part 2, Title 24 C.C.R. (1997 Uniform Building Code volumes 1,2 and 2B and 1998 California Amendments)
1998 California Electrical Code (CEC), Part 3, Title 24 C.C.R. (1997 National Electrical Code and 1998 California Amendments)
1998 California Mechanical Code (CMC), Part 4, Title 24 C.C.R. (1997 Uniform Mechanical Code and 1998 California Amendments)
1998 California Plumbing Code (CPC), Part 5, Title 24 C.C.R. (1997 Uniform Plumbing Code and 1998 California Amendments)
1998 California Fire Code (CFC), Part 9, Title 24, C.C.R, (1997 Uniform Fire Code and 1998 California Amendments)
1998 California Referenced Standards Code, Part 12, Title 24 C.C.R.
1998 Title 19, CCR, Public Safety, State Fire Marshal Regulations

STANDARDS & GUIDES

NFPA 13 – Automatic Sprinkler Systems,	1994 Edition
NFPA 14 – Standpipes Systems,	1993 Edition
NFPA 17A – Wet Chemical Systems,	1990 Edition
NFPA 24 – Private Fire Mains,	1992 Edition
(California Amended) NFPA 72 – National Fire Alarm Codes	1993 Edition
NFPA 253 – Critical Radiant Flux of Floor Covering Systems	1989 Edition
NFPA 2001 – Clean Agent Fire Extinguishing Systems	1994 Edition

Reference Code Section for NFPA Standards – CBC (SFM) 3503.1.3

GENERAL FIRE ALARM NOTES

1. The system shall conform to Titles 19 & 24 as applicable to this project.
2. Upon completion of system installation, the system shall be tested in the presence of and in a manner acceptable to the enforcing agency.
3. Penetrations of fire-rated walls shall be protected in accordance with California Building Code, Part 2, Chapter ~~43~~, 7 Title 24.

FIRE ALARM SYSTEM DESCRIPTION

FIRE ALARM WORK CONSISTS OF INSTALLATION OF COMPLETE MANUAL FIRE ALARM SYSTEM IN THE ENTIRE SCHOOL.

FIRE ALARM SEQUENCE OF OPERATION

DEVICE / ACTION	MANUAL PULL STATION	AREA SMOKE DETECTORS	DUCT SMOKE DETECTORS	ANSUL SYSTEM	SPRINKLER WATERFLOW SWITCH	SPRINKLER VALVE TAMPER SWITCH	AC POWER FAILURE
SOUND ALARM THROUGHOUT BUILDING	YES	YES	YES	YES	YES	NO	NO
ACTIVATE RELAY FOR MONITORING	YES	YES	YES	YES	YES	YES	YES
ANNUNCIATE AT PANEL & ANNUNCIATOR	YES	YES	YES	YES	YES	YES	YES
SOUND TROUBLE BUZZER	ON WIRING FAULT	ON WIRING FAULT	ON WIRING FAULT	ON WIRING FAULT	ON WIRING FAULT	YES	YES
SOUND SPRINKLER BELL	NO	NO	NO	NO	YES	NO	NO
NOTIFY CENTRAL STATION	NO	NO	NO	NO	YES	NO	NO
SHUT-OFF A/C UNIT	NO	NO	YES	NO	NO	NO	YES

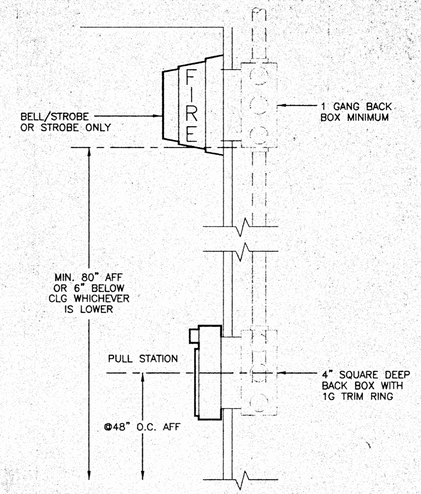

HEIGHT REQUIREMENTS - PULL STATION, BELL & STROBE

N.T.S.

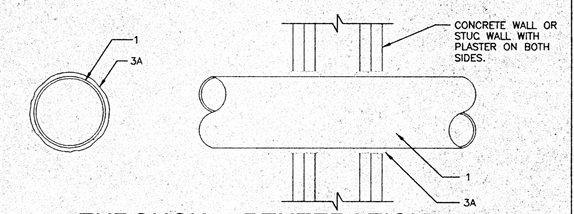

THROUGH - PENETRATION FIRESTOP SYSTEM

1. PIPE OR CONDUIT – NOM 12 IN. DIA. (OR SMALLER) SCHEDULE 10S (OR HEAVIER) STEEL PIPE, NOM 6 IN. DIA. (OR SMALLER) RIGID STEEL CONDUIT, NOM 4 IN. DIA. (OR SMALLER) STEEL E.M.T., NOM 4 IN. DIAMETER (OR SMALLER) TYPE L (OR HEAVIER) COPPER PIPE OR NOM 1 IN. DIA. (OR SMALLER) FLEXIBLE STEEL CONDUIT. WHEN COPPER PIPE OR FLEXIBLE STEEL CONDUIT IS USED, MAX F RATING OF FIRESTOP SYSTEM (ITEM 3) IS 2H. STEEL PIPES OR CONDUITS LARGER THAN NOM. 4 IN. DIA. MAY ONLY BE USED IN WALLS CONSTRUCTED USING STEEL CHANNEL STUDS. A MAX OF ONE PIPE OR CONDUIT IS PERMITTED IN THE FIRESTOP SYSTEM. PIPE OR CONDUIT TO BE INSTALLED NEAR CENTER OF STUD CAVITY WIDTH AND TO BE RIGIDLY SUPPORTED ON BOTH SIDES OF WALL ASSEMBLY.
2. PIPE COVERING –(OPTIONAL) NOM 1 OR 2 IN. THICK HOLLOW CYLINDRICAL HEAVY DENSITY (MIN. 3.5 PCF) GLASS FIBER UNITS JACKETED ON THE OUTSIDE WITH FOIL–SCRIM–KRAFT, LONGITUDINAL JOINTS SEALED WITH METAL FASTENERS OR FACTORY–APPLIED SSL. TRANSVERSE JOINTS SEALED WITH METAL FASTENERS OR WITH BUTT STRIP TAPE SUPPLIED WITH THE PRODUCT. SEE PIPE AND EQUIPMENT COVERINGS–MATERIALS (BRGU) CATEGORY IN BUILDING MATERIALS DIRECTORY FOR NAMES OF MANUFACTURES. ANY PIPE COVERING MATERIAL MEETING THE ABOVE SPECIFICATIONS AND BEARING THE UL CLASSIFICATIONS MARKING WITH FLAME SPREAD VALUE 25 OR LESS AND A SMOKE DEVELOPED VALUE OF 50 OR LESS MAY BE USED.
3. FIRESTOP SYSTEMS – INSTALLED SYMMETRICALLY ON BOTH SIDES OF WALL ASSEMBLY. THE HOURLY F RATING OF THE FIRESTOP SYSTEM IS DEPENDANT UPON THE HOURLY FIRE RATING OF THE FIRESTOP SYSTEM IS DEPENDANT UPON THE TYPE OR SIZE OF THE PIPE OR CONDUIT, THE ABSENCE OR PRESENCE OF PIPE COVERING (ITEM 2), THE FIRESTOP CONFIGURATION AND THE HOURLY FIRE RATING OF THE WALL ASSEMBLY IN WHICH IT IS INSTALLED, THE FIRESTOP CONFIGURATION (A,B,C, OR D) IS DEPENDENT UPON THE SIZE OF THE ANNULAR SPACE BETWEEN THE PIPE OR CONDUIT (OR PIPE COVERING) AND THE PERIMETER OF THE CIRCULAR THROUGH OPENING IN THE GYPSUM WALLBOARD LAYERS, AS TABULATED BELOW.

MAX PIPE OR CONDUIT DIA. IN.	NOM PIPE COVERING THKNS IN.	ANNULAR SPACE IN.	FIRESTOP CONFIG. (A)	F RATING, HR.	T RATING HR.
1	NONE	0 TO 3/16	A	1 OR 2	0 +, 1 OR 2
1	NONE	1/4 TO 1/2	A	3 OR 4	3 OR 4
4	NONE	0 TO 1/4	A	1 OR 2	0
6	NONE	1/4 TO 1/2	A	3 OR 4	0
12	NONE	3/16 TO 3/8	A	1 OR 2	0

+ WHEN COPPER PIPE IS USED, T RATING IS Oh
(A)A INDICATES FIRESTOP CONFIGURATION, AS DESCRIBED IN THE FOLLOWING:

A. FILL VOID OR CAVITY MATERIAL–CAULK – CAULK FILL MATERIAL INSTALLED TO COMPLETELY FILL ANNULAR SPACE BETWEEN PIPE OR CONDUIT AND GYPSUM WALLBOARD AND WITH A MIN 1/4 IN. DIA. BEAD OF CAULK APPLIED TO PERIMETER OF PIPE OR CONDUIT AS IT EGRESS FROM THE WALL. MINNESOTA MINING & MANUFACTURING–TYPES CP–25 S/L, CP–25 N/S, CP–25 W/B.(UL #WL1001)

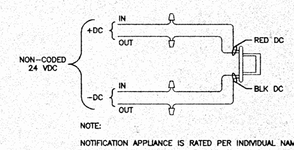

VISUAL WIRING DIAGRAM

STROBE LIGHT

N.T.S.

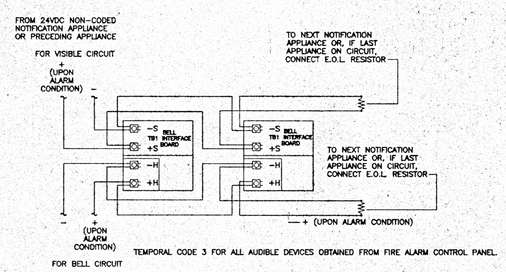

VISUAL/BELL WIRING DIAGRAM

DUAL INPUT BELL/STROBE

N.T.S.

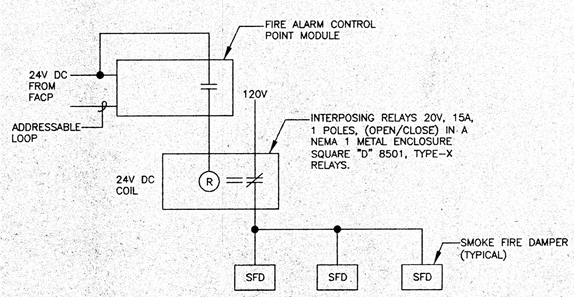

TYPICAL SMOKE FIRE DAMPER AND FIRE ALARM CONTROL POINT MODULE SINGLE LINE DIAGRAM

N.T.S.

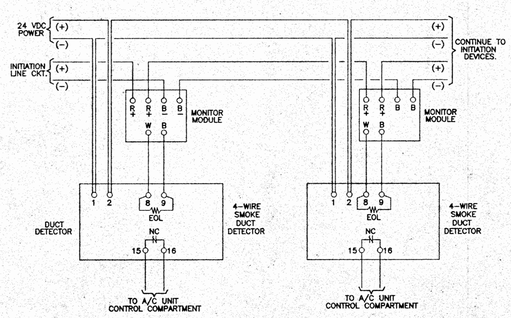

DUCT SMOKE DETECTOR WIRING DIAGRAM

N.T.S.

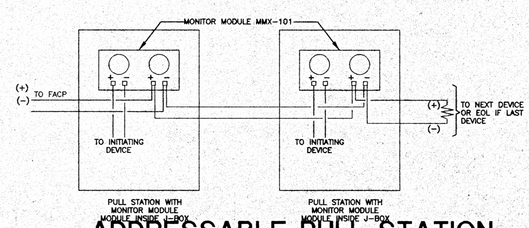

ADDRESSABLE PULL STATION

N.T.S.

PACIFIC ENGINEERS GROUP
Consulting Electrical Engineers
11028 Victory Boulevard, Suite 201
North Hollywood, Ca. 91606-3720
(213) 877-5304 (818) 763-9189
FAX (818) 763-9180

CARMICHAEL-KEMP ARCHITECTS A.I.A.
12820 LOS FELIZ PLACE • LOS ANGELES • (213) 826-1261

NEW SCIENCE BUILDING at MT. MIGUEL HIGH SCHOOL
1800 Sweetwater Road, Spring Valley, CA 91977
GROSSMONT UNION HIGH SCHOOL DISTRICT

FIRE ALARM NOTES & DETAILS

JOB NO. 9822-1
DATE: 12-14-99
SHEET NUMBER E-105
DRAWING ORDER 75 of 82

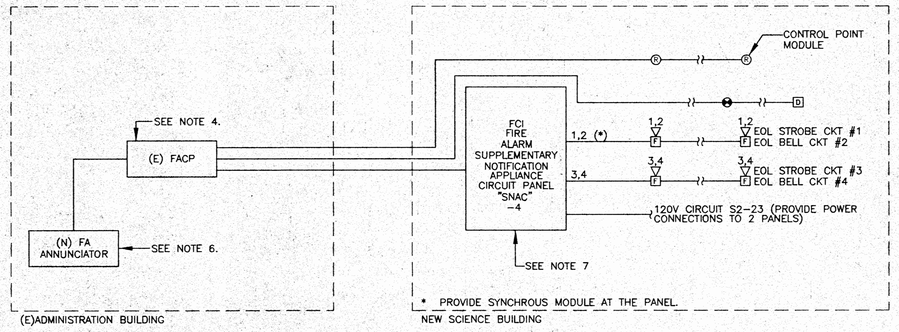

FIRE ALARM RISER DIAGRAM

N.T.S.

NOTES:

1. ALL WIRING SHALL BE IN CONDUITS. SEE FLOOR PLAN FOR CONDUIT AND DEVICE LAYOUT.
2. THIS IS AN ADDRESSABLE FIRE ALARM SYSTEM. EACH INITIATION DEVICE IS A SEPARATE ZONE WITH ITS OWN ADDRESS.
3. ALL WIRING IN WET LOCATIONS OR OUTDOORS MUST BE "THWN" OR EQUAL.
4. EXISTING FACP IS A FCI HARD-WIRED PANEL. CONTRACTOR SHALL REPLACE EXISTING COMPONENTS WITH NEW FC 7200 ADDRESSABLE FIRE ALARM SYSTEM IN CONTROL PANEL. ENCLOSURE CONTRACTOR SHALL DISCONNECT ALL EXISTING WIRING AND RECONNECT EXISTING WIRING TO THE NEW FIRE ALARM CONTROL PANEL. PROVIDE NEW WIRING AND NEW FIRE ALARM SYSTEM TO THE NEW SCIENCE BUILDING.
5. FOR CLARITY, PULL BOXES ARE NOT SHOWN.
6. PROVIDE A NEW ANNUNCIATOR PANEL WITH NEW WIRING AND CONDUITS. LOCATE NEW ANNUNCIATOR IN FRONT OFFICE. PROVIDE A 120V, 2#12 & 1#12 GND IN 1/2"C TO NEAREST RECEPTACLE OUTLET CONNECT WIRES TO EXISTING RECEPTACLE CIRCUIT.
7. PROVIDE TWO "SNAC-4" PANELS, ONE FOR BELL CIRCUITS AND ONE FOR STROBE CIRCUITS.

FIRE ALARM SIGNAL CIRCUIT SCHEDULE

CKT. NO.	QUAN. BELL 0.03	QUAN. INT. HORN 0.023	QUAN. MINI HORN 0.012	QUAN. STROBE 15 cd 0.09	QUAN. STROBE 30 cd 0.09	QUAN. STROBE 110 cd 0.14	QUAN. EXT. HORN 0.04	TOTAL AMPS	WIRE SIZE	DISTANCE (IN FEET)	TO FACP	TO SNAC-4	PERCENT VOLTAGE DROP
* 1						6		0.84	#12	250		X	~~9.89~~ 5.25
2	5							0.15	#12	250		X	0.52
3				3		3		1.05	#12	220		X	3.18
4	5							0.15	#12	280		X	0.58
5				2				0.22	#12	300		X	0.91
6								0.00					0.00
7								0.00					0.00
8								0.00					0.00

* SYNCHRONOUS STROBE CIRCUIT.

FORMULA FOR VOLTAGE DROP CALCULATION:

I = TOTAL CURRENT FLOW IN ALARM CONDITION
L = LENGTH OF CIRCUIT FROM SUPPLY TO LAST DEVICE (IN FEET)
21.6 = RESISTIVITY OF COPPER CONDUCTOR PER CIRCULAR MILL (10.8 X 2 FOR TWICE THE LENGTH)
C.M. = CROSS SECTIONAL AREA OF CONDUCTOR IN CIRCULAR MILLS

$$\text{VOLTAGE DROP} = \frac{(I) \times (L) \times 21.6}{(CM)}$$

BATTERY CALCULATIONS - POWER EXPANDER

EQUIPMENT MODEL	QUANTITY	SUPERVISORY CURRENT UNIT	SUPERVISORY CURRENT TOTAL	ALARM CURRENT, A UNIT	ALARM CURRENT, A TOTAL
FCI POWER EXPANDER SNAC - 4	1	0.235	0.235	0.12	0.12
BELL	7	0	0	0.023	0.161
STROBES 15cd	4	0	0	0.094	0.376
STROBES 110 cd	6	0	0	~~0.014~~ .245	~~0.084~~ 1.47
					2.12

STANDBY AH 14.10
ALARM AH ~~0.06~~ .1765
TOTAL ~~14.16~~ 14.28

SUB TOTAL 0.24
HOURS 60.00
AH STANDBY 14.10

SUB TOTAL ~~0.747~~
HOURS ~~0.083~~
AH ALARM 0.061503 .1765

PROVIDE 21 AH BATTERY PACK (0.083 HRS. = 5 MIN.)

COMPONENT	FCI CAT. NO.	CSFM NO.
FIRE ALARM CONTROL PANEL	FC7200A	7165-0694:174
ANNUNCIATOR/BACKBOX	KDU/RHBS	7165-0694:174
SUPPLEMENTARY NOTIFICATION APPLIANCE CIRCUIT PANEL	SNAC-4	7300-0694:191
ADDRESSABLE CONTROL MODULE	AOM-2	7300-0694:178
ADDRESSABLE MINI MODULE	AMM-2	7300-0694:178
DUCT SMOKE DETECTOR	ASD-PL	7271-0694:161
DUCT SMOKE DET. BASE/HOUSING	DH-500	7271-0694:161
ALARM BELL/STROBE 110 cd	B/STS	7125-0694:185
BELL	BLS-6	7135-0694:183
ALARM BELL/STROBE	B/STW	7125-0694:188

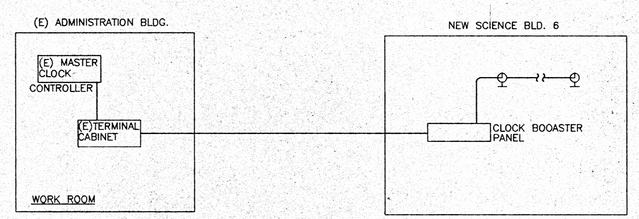

1. SEE FLOOR PLAN FOR DEVICES LOCATIONS.
2. FOR CLARITY, PULL BOXES ARE NOT SHOWN.
3. SEE SITE PLAN FOR CONDUIT ROUTING.

1 / E-106 CLOCK RISER DIAGRAM

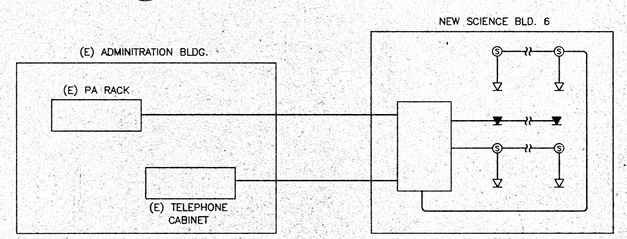

1. SEE FLOOR PLAN FOR DEVICES LOCATIONS
2. FOR CLARITY, PULL BOXES ARE NOT SHOWN
3. SEE SITE PLAN FOR CONDUIT ROUTING

2 / E-106 PA/TEL RISER DIAGRAM

PACIFIC ENGINEERS GROUP
Consulting Electrical Engineers
11028 Victory Boulevard, Suite 201
North Hollywood, Ca. 91606-3720
(213) 877-5304 (818) 763-9189
FAX (818) 763-9180

FIRE ALARM DIAGRAMS

CARMICHAEL-KEMP ARCHITECTS AIA
2630 LOST FEDER PLACE • LOS ANGELES 5 • 213-665-2861

CONTRACTOR STAMP
OFFICE OF THE STATE ARCHITECT
APPROVED FOR CONSTRUCTION
APPR. NO. 4 (6/5/97)
DATE JUL 14 1999

NEW SCIENCE BUILDING at MT. MIGUEL HIGH SCHOOL
1800 Sweetwater Road, Spring Valley, CA 91977
GROSSMONT UNION HIGH SCHOOL DISTRICT

JOB NO. 9822-1
DATE: 12-14-99
SHEET NUMBER
E-106
BINDING ORDER 76 OF 82

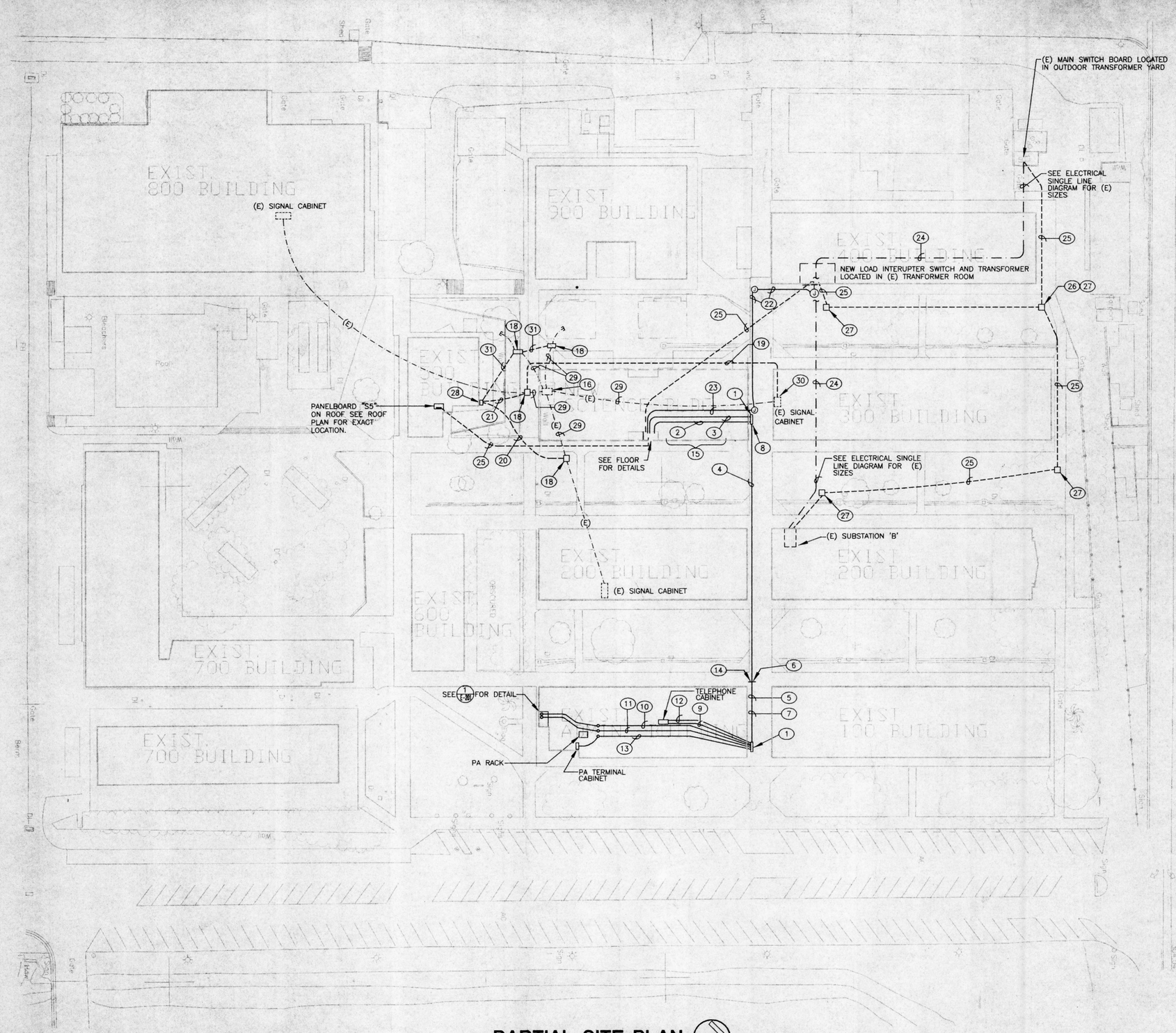

PARTIAL SITE PLAN

1"=40'-0"

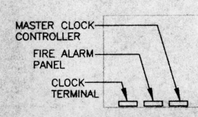

ROOM LAYOUT

N.T.S. (VERIFY EXACT LOCATION ON SITE)

GENERAL NOTES

1. ALL SIGNAL CONDUITS SHALL BE RUNNING AT THE TOP OF EXISTING ADJACENT CANOPY ROOF.
2. CONTRACTOR SHALL VERIFY ON SITE THE (E) 3"C.O. (DATA) LOCATION (E) CONDUIT IS CAPPED ALONG THE EXISTING CANOPY ROOF. PROVIDE PROVIDE NEW 3"C, FROM THE EXISTING LOCATION AND CONNECT THE SIGNAL PULL BOX.
3. ITEMS IN KEYED NOTES # 16, 17, 18, 19, 20, 21, 28, 29, 30, 31 SHALL BE CARRIED OUT BY STANDARD ELECTRONICS AS SUB CONTRACTOR.
4. CONTRACTOR SHALL VERIFY EQUIPMENT LOCATIONS INSIDE ADMINISTRATION BUILDING DURING BID AND ALLOW ALL THE CONDUITS RUNS AND ROUTING AS PART OF BID. ALL CONDUITS INSIDE ADMINISTRATION BUILDINGS SHALL BE CONCEALED INSIDE CEILING VOID IN AREAS WITH Y-BAR CEILING AND ON ROOF IN OTHER AREAS.

KEYED NOTES

1. WEATHERPROOF SIGNAL PULL BOXES AT EDGE OF ROOF. PROVIDE UNISTRUT SUPPORT CHANNEL FOR ATTACHMENT. 36" X 36"X 12"D WITH SCREW COVER FOR DATA/PA/TEL/SEC SYSTEM AND 16" X 16"X 6"D WITH SCREW COVER FOR FIRE WITH ALARM SYSTEM.
2. (1) 2"C, (1)DFO (DATA).
3. (1) 2"C, (6)TW & (6)TW SPARE (TEL). (1) 2-1/2"C, (13) AW & (6) AW SPARE (4) BW & (4) BW SPARE (PA); (1) 1-1/2"C.O. (TV), (1) 1-1/2"C.O. (SEC); (1) 1"C, (1) CW & (1) CW SPARE (CLK); (1) 2"C, (2) FW, 8#12 & (1) FW; 4#12 SPARE (FA).
4. (1) 3"C, (1)DFO (DATA); (1) 2-1/2"C, (13) AW & (6) AW SPARE (4) BW & (4) BW SPARE (PA); (1) 2"C, (6) TW & (6) TW SPARE (TEL); (1) 1-1/2"C.O. (TV); (1) 1"C, (1) CW & (1) CW SPARE (CLK); (1) 2"C, (2) FW, 8#12 & (1) FW, 4#12 SPARE (FA); (1) 2"C.O. SPARE; (1) 2"C.O. (SEC).
5. (E) (1) 3"C, NEW (1) DFO (DATA).
6. PROVIDE NEW (1) 3" CONDUIT (DATA) TO DATA SIGNAL PULL BOX. VERIFY EXACT LOCATION ON SITE.
7. (1) 2"C, (6) TW & (6) TW SPARE (TEL); (1) 2-1/2"C, (13) AW & (6) AW SPARE (4) BW & (4) BW SPARE (PA); (1) 1"C, (1)CW & (1) CW SPARE (CLK); (1) 2"C, (2) FW, 8#12 & (1) FW, 4#12 SPARE (FA); (1) 2"C.O. (SPARE); (1) 2"C.O. (TV); (1) 2"C.O.(SEC)
8. EXTEND (E) 3"C, (DATA) TO PULL BOX AND CONNECT TO THE PULL BOX. RUN NEW (1) DFO IN (E) CONDUIT TO (E) ADMINISTRATION BUILDING. VERIFY EXACT LOCATION OF (E) 3"C.O. (DATA).
9. (1) 2"C, (6) TW & (6) TW SPARE (TEL), TERMINATE AT (E) MAIN TELEPHONE TERMINAL VERIFY EXACT LOCATION ON SITE.
10. (1) 1"C, (1) CW & (1) CW SPARE (CLK), TERMINAL AT (E) MASTER CLOCK EQUIPMENT IN WORKROOM. PROVIDE FINAL CONNECTIONS AND ALL NECESSARY INTERFACE EQUIPMENT FOR NEW CLOCKS IN SCIENCE BUILDING. VERIFY EXACT LOCATION ON SITE.
11. (1) 2"C, (2) FW, 8#12 & (1) FW & 4#12 SPARE (FA) TERMINAL AT NEW FIRE ALARM CONTROL PANEL ADJACENT TO (E) CLOCK EQUIPMENT IN WORKROOM.
12. (1) 2"C.O. (TV) & (1) 2"C.O. (SEC) CONDUIT STUB UP AND CAPPED AT HIGH LEVEL INSIDE THE TELEPHONE ROOM.
13. (1) 2-1/2"C, (13) AW & (6) AW SPARE (4) BW & (4) BW SPARE (PA), TERMINATE AT (E) PA RACK.
14. (E) 3"C.O. (DATA) STUBBED UP AND CAPPED LOCATION VERIFY EXACT LOCATION.
15. SEE FLOOR PLAN FOR CONDUITS ROUTING.
16. EXISTING PA/BELL/CLOCK SUPPLY IN A TEMPORARY WOODEN BOX ABOVE GROUND. THE (E) CIRCUITS CONSIST OF 4 RELAY FOR CLOCK IMPLUSE (2 CKTS) AND BELL (2CKTS) CONTRACTOR SHALL REMOVE THE BOX AND REROUTE ALL WIRING AND CONDUITS BEFORE THE CONSTRUCTION OF THE NEW PROJECT. RELOCATE ALL THE EQUIPMENT TO A WEATHERPROOF CABINET 24"W x 36" x 6"H MOUNTED AT 18" ABOVE GROUND (TO THE BOTTOM OF CABINET) ON THE EXTERIOR WALL OF BLDG. 500.
17. NOT USED.
18. INTERCEPT EXISTING CONDUIT WITH NEW CONCRETE PULL BOX SIZE AND DEPTH AS REQUIRED TO SUIT EXISTING CONDITION AND PROVIDE NEW CONDUIT TO NEW SIGNAL CABINET MOUNTED ON THE OUTSIDE WALL OF BUILDING 500. PROVIDE CONNECTION FOR NEW WIRING TO (E) WIRING.
19. NEW 1 1/2"C WITH NEW WIRING 16#12 WIRING.
20. NEW 1 1/2"C WITH NEW WIRING 20#12 WIRING. CONNECT NEW WIRING TO NEW SIGNAL CABINET.
21. NEW 2"C WITH NEW WIRING 15#12 WIRING. CONNECT NEW WIRING TO NEW SIGNAL CABINET.
22. NEW 1"C WITH 2#12 (FA) RUNNING AT TOP OF COVERED WALK WAY. PROVIDE WEATHERPROOF 2-GANG J-BOX.
23. NEW 1"C, WITH 2#12 (FA) IN CEILING SPACE.
24. REMOVE (E) CABLES AND CAPPED (E) CONDUITS.
25. NEW UNDERGROUND CONDUITS AND WIRES FOR POWER SUPPLY. SEE ELECTRICAL SINGLE LINE DIAGRAM FOR SIZES.
26. PROVIDE CABLE SPLICES INSIDE MANHOLE, MOUNT CABLE SPLICES ON UNISTRUT ON THE WALL.
27. NEW MANHOLE SEE SHEET E-102 FOR SIZE AND DETAIL.
28. LOCATION FOR NEW SIGNAL CABINET CONTAINS EXISTING RELAYS. PROVIDE 1/2"C WITH 3#12 AWG TO NEW PANELBOARD S5-20.
29. REMOVE (E) CONDUITS AND WIRINGS.
30. PROVIDE CONNECTIONS TO (E) EQUIPMENT FROM NEW WIRING AND REMOVE (E) WIRINGS. CAPPED EXISTING CONDUIT.
31. NEW 1-1/2" WITH NEW WIRING. CONNECT NEW WIRING TO NEW SIGNAL PULL BOX. VERIFY WIRING QUANTITIES ON SITE. AS PART OF BID ALLOW NEW 20#12 WIRINGS FOR RECONNECTION AS PART OF BID.

PACIFIC ENGINEERS GROUP
Consulting Electrical Engineers
11028 Victory Boulevard, Suite 201
North Hollywood, Ca. 91606-3720
(213) 877-5304 (818) 763-9189
FAX (818) 763-9180

PARTIAL SITE PLAN

CARMICHAEL-KEMP ARCHITECTS A.I.A.
2870 LOS FELIZ PLACE • LOS ANGELES • 213 663 1266

NEW SCIENCE BUILDING at MT. MIGUEL HIGH SCHOOL
1800 Sweetwater Road, Spring Valley, CA 91977

GROSSMONT UNION HIGH SCHOOL DISTRICT

JOB NO.	9822-1
DATE:	12-14-99
SHEET NUMBER	E-201
BINDING ORDER	77 of 82

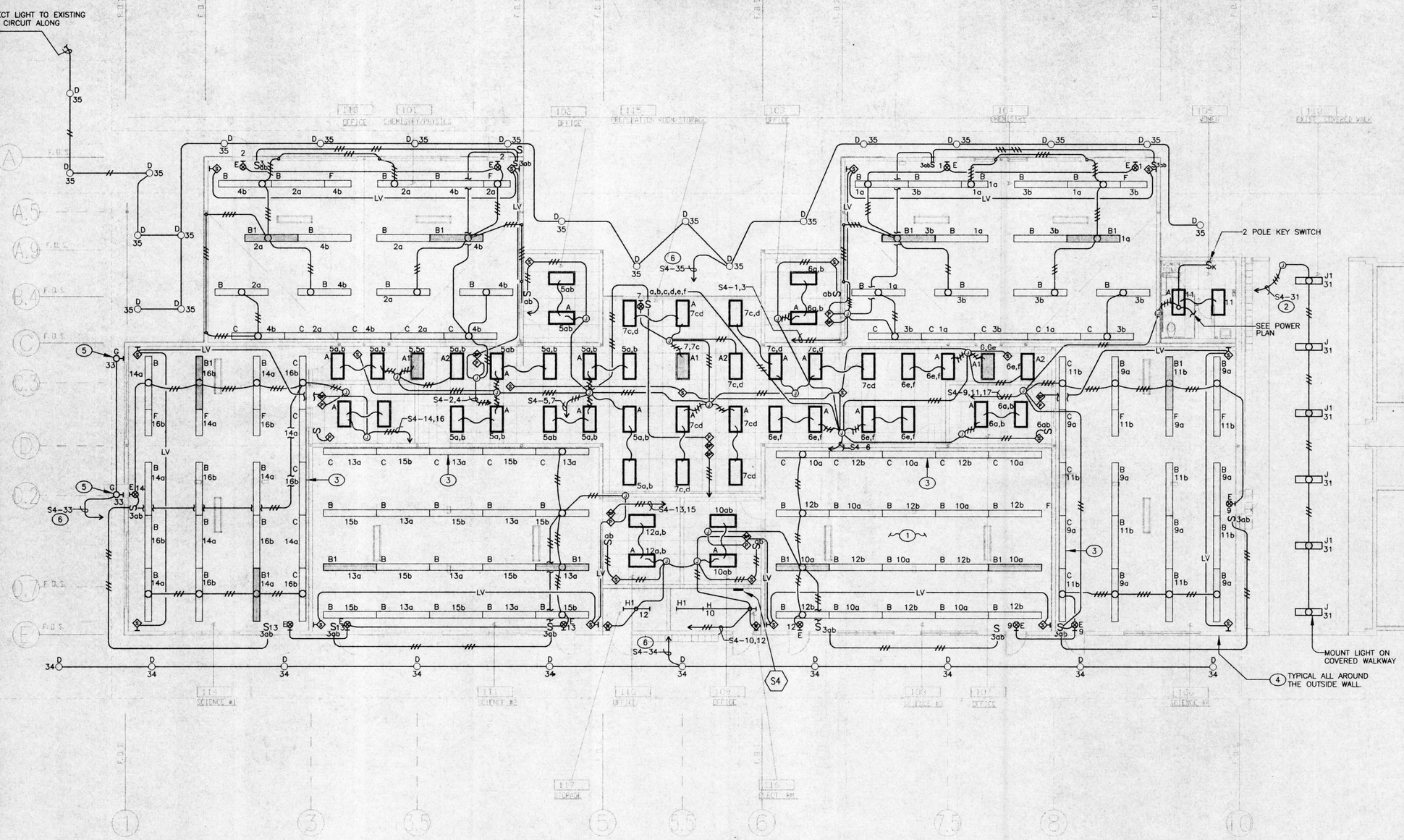

LIGHTING FLOOR PLAN

KEYED NOTES

1. ADD WOOD BLOCKING TO SUPPORT LIGHT FIXTURES. REFER TO ARCH. DETAIL C1/1501.
2. VIA 7-DAY ASTRONOMICAL 4 POLE TIME CLOCK LOCATED IN ELECTRICAL ROOM. MOUNTED TIME CLOCK WITH RELAYS IN A NEMA 1 ENCLOSURE MOUNTED BELOW PANELBOARD.
3. FOR MOUNTING HEIGHT SEE ARCHITECT INTERIOR ELEVATION DRAWINGS.
4. CONTRACTOR SHALL NOTE THE PERIMETER WALL AROUND THE ENTIRE BUILDING DO NOT ALLOW CONDUITS TO PASS THROUGH VERTICALLY. CONTRACTOR SHALL REFER TO STRUCTURAL DRAWINGS TO COORDINATE THE CONDUITS RUN FEEDING WALL MOUNTED DEVICES.
5. SEE ARCH. DRAWING FOR MOUNTING HEIGHT.
6. VIA TIME CLOCK.

1/8" = 1'-0"
0 2' 4' 8' 16' 32'

NORTH

PACIFIC ENGINEERS GROUP
Consulting Electrical Engineers
11028 Victory Boulevard, Suite 201
North Hollywood, Ca. 91606-3720
(213) 877-5304 (818) 763-9189
FAX (818) 763-9180

CARMICHAEL-KEMP ARCHITECTS A.I.A.
4370 LOS FELIZ PLACE • LOS ANGELES • 213 666 1228

NEW SCIENCE BUILDING at MT. MIGUEL HIGH SCHOOL
1800 Sweetwater Road, Spring Valley, CA 91977
GROSSMONT UNION HIGH SCHOOL DISTRICT

LIGHTING FLOOR PLAN

JOB NO.	9822-1
DATE:	12-14-99
SHEET NUMBER	E-401
BINDING ORDER	78 OF 82

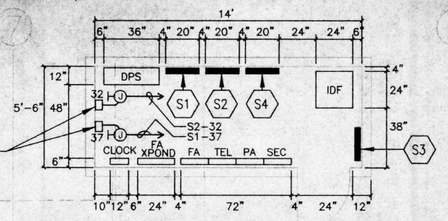

CONTACTORS FOR FIRE ALARM POINT (TOTAL 11 CONTACTORS FOR 11 FIRE ALARM POINT MODULES). MOUNT CONTACTORS IN NEMA 1 ENCLOSURE FIRST GROUP HAS A CONTACTORS SECOND GROUP HAS 7 CONTACTORS.

ENLARGED ELEC. ROOM

N.T.S.

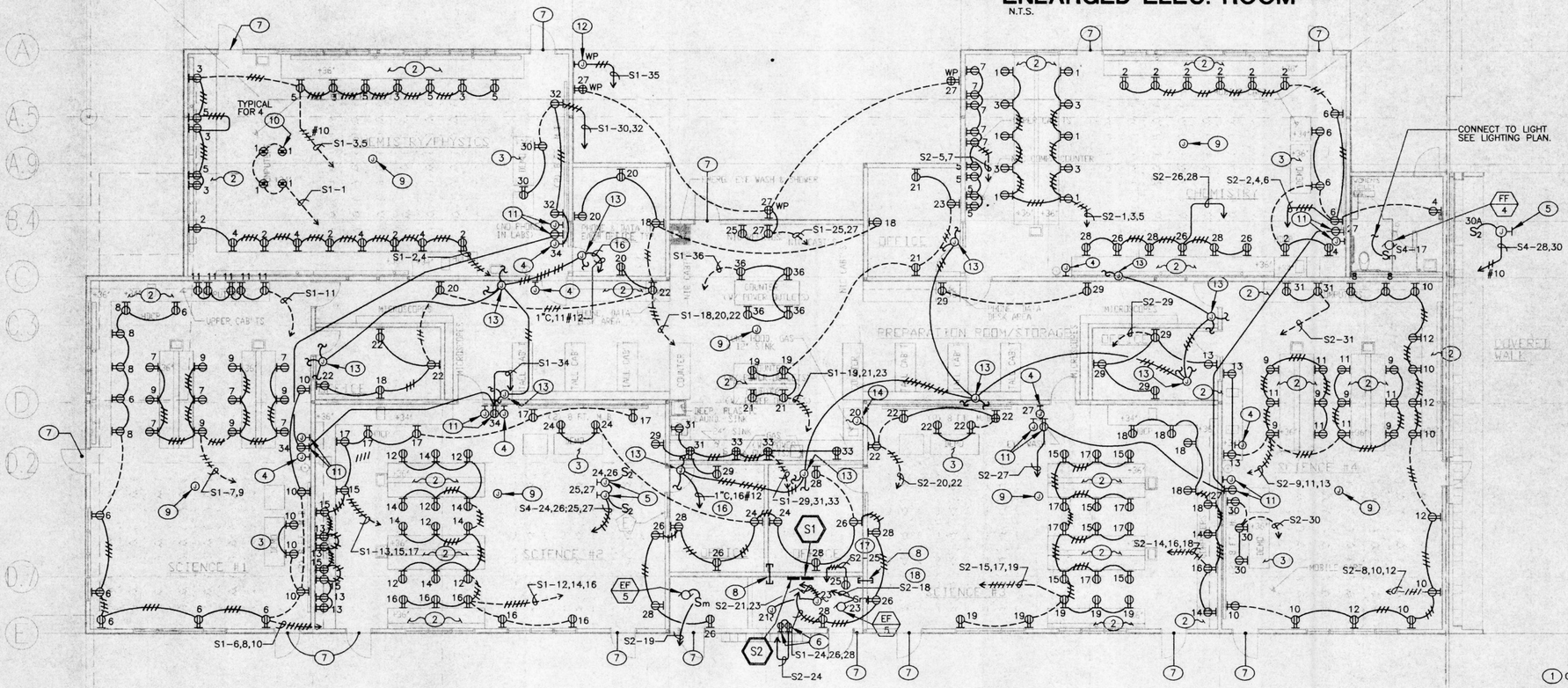

POWER FLOOR PLAN

GENERAL NOTES

1. CONTRACTOR SHALL COORDINATE WITH THE CASE WORK INSTALLER FOR CONDUITS AND RECEPTACLE OUTLET INSTALLATION FOR ALL WORK BENCHES. COORDINATE CONDUIT STUB UP LOCATIONS AND ROUTING OF CONDUITS WITHIN THE CASE WORK. SECURE CONDUITS INSIDE WORK BENCH TO CASE WORK.
2. PROVIDE 1"C FOR HVAC CONTROL WIRING AS REQUIRED BY HVAC CONTROLS. COORDINATE ROUTING AND LOCATIONS WITH MECHANICAL CONTRACTOR. SEE MECHANICAL DRAWINGS FOR DETAILS.
3. PROVIDE A #10 GROUND WIRE FOR ALL CIRCUITS CONDUITS RUNNING BELOW GRADE. RUN GROUND WIRE FROM PANELBOARD TO ALL RECEPTACLE OUTLETS. FOR CLARITY GROUND WIRE IS NOT SHOWN ON DRAWINGS.
4. REFER TO STRUCTURAL DRAWINGS (5/S4) FOR CONDUITS THROUGH FOUNDATION AT ALL DRAWINGS WITH HOME RUNS. THIS APPLIES TO LIGHTING, POWER AND SIGNAL CONDUITS.

KEYED NOTES

1. OUTLET FOR HVAC CONTROL.
2. RECEPTACLE OUTLETS MOUNTED 6" ABOVE WORK TOP ALONG BACKSPLASH ABOVE THE COUNTERS OR TO THE SHELF. SEE ARCHITECTURAL DRAWING FOR LOCATIONS.
3. SEE ARCHITECTURAL DETAIL FOR MOUNTING HEIGHT AND EXACT LOCATION.
4. J-BOX FOR FUTURE ENERGY MANAGEMENT SYSTEM. MOUNT J-BOX ADJACENT TO THERMOSTAT. COORDINATE EXACT LOCATION WITH MECHANICAL DRAWINGS LOCATIONS AS SHOWN ON MECHANICAL DRAWINGS SHALL TAKE PRECEDENT.
5. WATER HEATER CONNECTION AT GRID LINE 5/D IN PREPARATION/STORAGE ROOM. COORDINATE EXACT LOCATION WITH PLUMBING
6. OUTLETS FOR FUTURE SECURITY SYSTEM POWER SUPPLY.
7. PROVIDE J-BOX AND CONDUIT FOR FUTURE SECURITY SYSTEM. SEE DETAIL (2/E-501)
8. PROVIDE 1"C.O. SLEEVES INSIDE CEILING SPACE FOR FUTURE SECURITY SYSTEM WIRING.
9. PROVIDE A FLUSH CEILING MOUNTED J-BOX IN THE CENTER OF ROOM. RUN 1"C.O. FROM J-BOX THE CEILING SPACE NEAREST T-BAR CEILING, STUB CONDUIT INSIDE CEILING FOR FUTURE SECURITY SYSTEM.
10. SEE ARCHITECTURAL DRAWING FOR EXACT LOCATION OF OUTLETS FOR MOVABLE COMPUTER CART.
11. DUPLEX RECEPTACLE AND FLUSH WALL MOUNTED J-BOX WITH 3/4"C.O. EXTENDED TO NEAREST T-BAR CEILING SPACE. FOR FUTURE TV CABLE, SEE ARCHITECTURAL DRAWINGS FOR ELEVATION AND LOCATION. RUN 1-1/4"C.O. FROM J-BOX TO DATA OUTLET MOUNTED AT THE DEMO. TEACHER WORK STATION.
12. J-BOX FOR CONNECTION TO IRRIGATION CONTROLLER.
13. J-BOX FOR SMOKE FIRE DAMPERS. SEE DETAIL CONTRACTOR (3/E-501) CONTRACTOR SHALL NOTE THAT THE J-BOX POWER MULTIPLE SMOKE FIRE DAMPERS. SEE MECHANICAL DRAWINGS FOR LOCATION AND QUANTITIES.
14. J-BOX FOR CONNECTION TO FUME HOOD.
15. WATER HEATER CONNECTION IN WOMEN'S TOILET. COORDINATE EXACT LOCATION WITH PLUMBING DRAWING.
16. VIA CONTACTORS IN ELECTRICAL ROOM.
17. PROVIDE 1"C,2#12 & 1#6. PROVIDE 1#6 GROUND WIRE CONNECTION TO IDF RACK.
18. VIA ROOM "ON-RISE" 120V THERMOSTAT SEE MECHANICAL DRAWING FOR EXACT LOCATION.
19. WP J-BOX LOCATED AT THE A/C UNIT OF ROOF SEE KEYED NOTE #5 ON SHEET E-502.

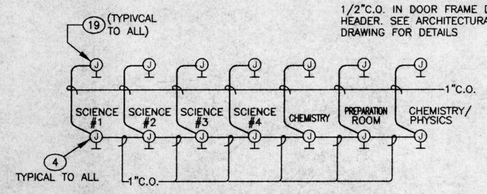

1 / E-501 CONDUIT RISER BETWEEN J-BOXES FOR ROOM THERMOSTATS
N.T.S.

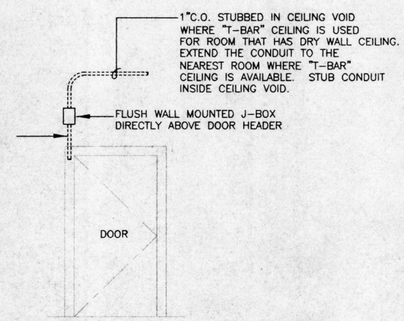

2 / E-501 J-BOXES AND CONDUIT DETAIL FOR FUTURE SECURITY SYSTEM
N.T.S.

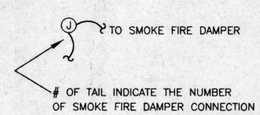

3 / E-501 J-BOXES DETAIL FOR SMOKE FIRE DAMPERS
N.T.S.

1/8" = 1'-0"
0 2' 4' 8' 16' 32'

NORTH

PACIFIC ENGINEERS GROUP
Consulting Electrical Engineers
11028 Victory Boulevard, Suite 201
North Hollywood, Ca. 91606-3720
(213) 877-5304 (818) 763-9189
FAX (818) 763-9180

CARMICHAEL-KEMP ARCHITECTS A.I.A.
10970 LOS FELIZ PLACE • LOS ANGELES • 213 666 1233

NEW SCIENCE BUILDING at MT. MIGUEL HIGH SCHOOL
1800 Sweetwater Road, Spring Valley, CA 91977
GROSSMONT UNION HIGH SCHOOL DISTRICT

POWER FLOOR PLAN

JOB NO.	9822-1
DATE:	12-14-99
SHEET NUMBER	E-501
BINDING ORDER	79 of 82

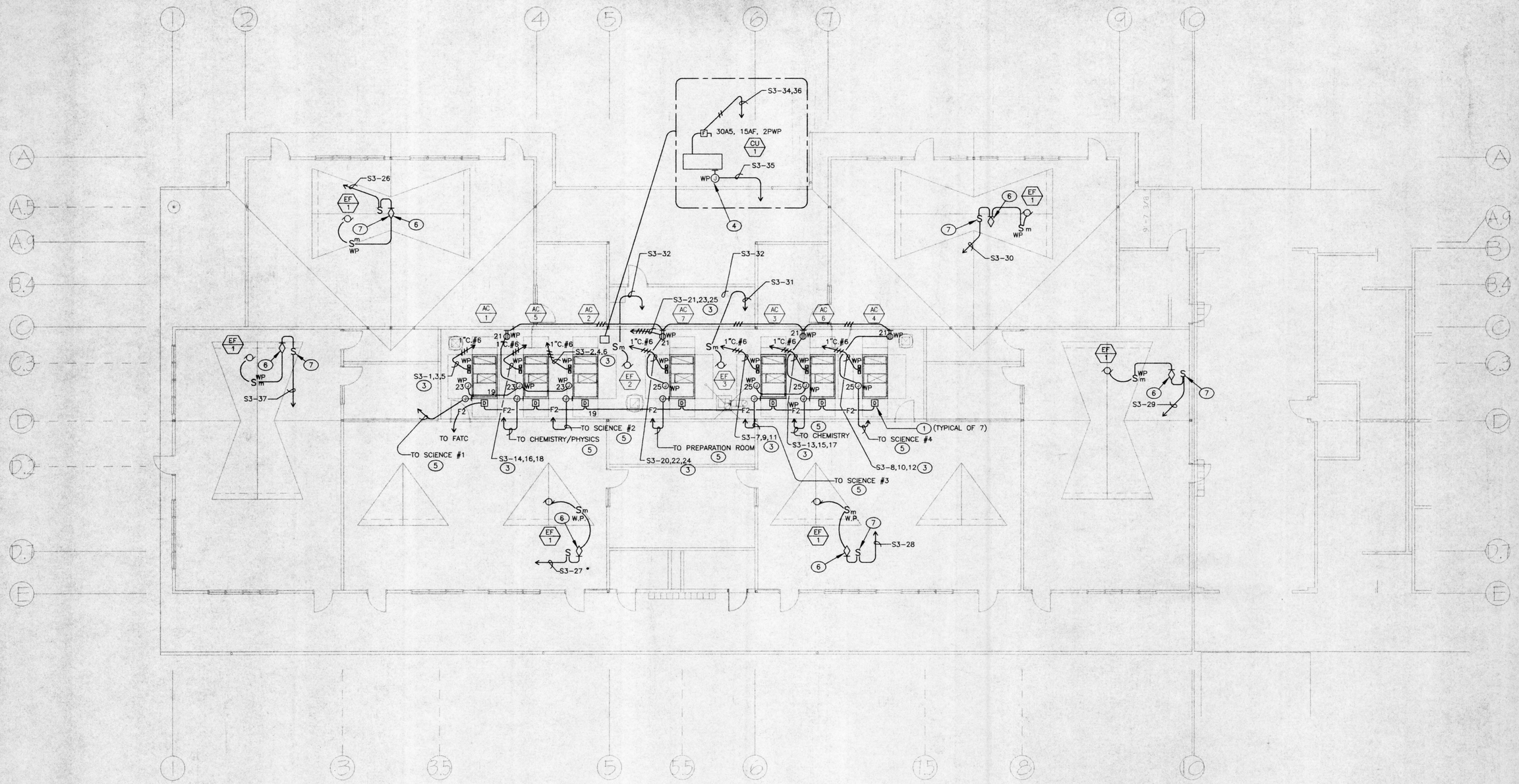

ROOF PLAN

KEYED NOTES

1. DUCT DETECTOR SHALL INTERCEPT HVAC CONTROL UNITS UPON RECEIVING ALARM SIGNAL PROVIDE TWO RELAYS AND ALL ASSOCIATED WIRINGS FOR THE INTERLOCKS. PROVIDE 3/4"C. WITH 2#12 WIRING FROM DUCT DETECTORS TO HVAC CONTROLLER. LOCATE DUCT DETECTORS BELOW A/C UNIT INSIDE DUCTS. PROVIDE ONE DUCT DETECTOR IN SUPPLY AND ONE DUCT DETECTOR IN RETURN AIR PLENUMS. TOTAL TWO DUCT DETECTORS FOR EACH A/C UNIT. FOR CLAIRTY ONLY ONE DUCT DETECTOR SYMBOL IS SHOWN. COORDINATE WITH MECHANICAL CONTRACTOR.
2. J-BOX FOR HVAC CONTROL. COORDINATE EXACT LOCATION WITH MANUFACTURER.
3. PROVIDE 30A FUSE 60A SWITCH FUSED DISCONNECT SWITCH. PROVIDE FINAL CONNECTION FROM DISCONNECT SWITCH TO A/C CONTROLLER.
4. J-BOX FOR HEATER.
5. WP J-BOX WITH 1"C.O. TO ROOM THERMOSTAT FOR FUTURE ENERGY MANAGEMENT SYSTEM. COORDINATE EXACT LOCATION WITH EQUIPMENT MANUFACTURER. SEE DWG-E501 KEY NOTES 4.
6. VARIABLE SPEED WALL SWITCH AT THE DOOR INSIDE CLASSROOM SUPPLIED BY MECHANICAL CONTRACTOR, INSTALLED AND CONNECTED BY ELECTRICAL CONTRACTOR.
7. PROVIDE AN ON/OFF SWITCH MOUNTED ADJACENT TO THE VARIABLE SPEED SWITCH.

GENERAL NOTES

1. LOCATION OF COMBINATION STARTER UNIT J-BOXES FOR HVAC EQUIPMENT ARE DIAGRAMMATIC. COORDINATE WITH MANUFACTURER FOR EXACT LOCATION.
2. PROVIDE FINAL CONNECTION FOR ALL MOTORS.
3. ALL EXTERIOR EQUIPMENT SHALL BE WEATHERPROOF TYPE.

1/8" = 1'-0"
0 2' 4' 8' 16' 32'

NORTH

PACIFIC ENGINEERS GROUP
Consulting Electrical Engineers
11028 Victory Boulevard, Suite 201
North Hollywood, Ca. 91606-3720
(213) 877-5304 (818) 763-9189
FAX (818) 763-9180

CARMICHAEL-KEMP
ARCHITECTS
A.I.A.
2310 LOS FELIZ PLACE • LOS ANGELES • 213 662 1283

IDENTIFICATION STAMP
DIV. OF THE STATE ARCHITECT
OFFICE OF REGULATION SERVICES
APPL NO. 4-109576
FLS
SS
AC
DATE DEC 14 1999

NEW SCIENCE BUILDING at MT. MIGUEL HIGH SCHOOL
1800 Sweetwater Road, Spring Valley, CA 91977
GROSSMONT UNION HIGH SCHOOL DISTRICT

ROOF PLAN

JOB NO. 9622-1
DATE: 12-14-99
SHEET NUMBER
E-502
SHEDING ORDER 60 of 62

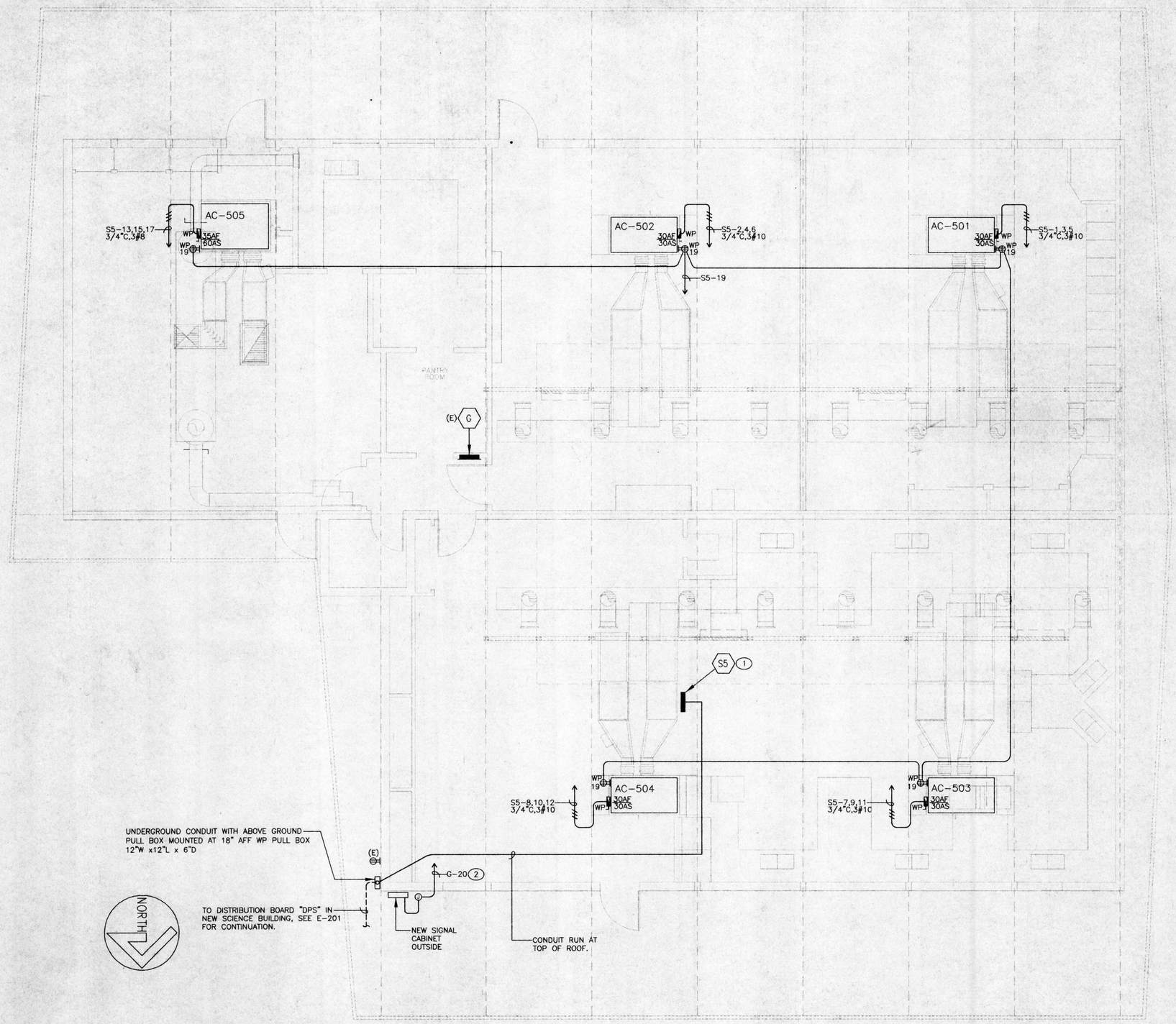

KEYED NOTES

1. PROVIDE A FREE STANDING UNISTRUT FRAME FOR PANEL BOARD. MOUNT PANEL BOARD AT 24" ABOVE ROOF LEVEL TO THE BOTTOM OF PANEL BOARD. FOR UNISTRUT FOOTING SEE DETAIL 2/E-102 FOR TYPICAL ARRANGEMENT.
2. INTERCEPT EXISTING CIRCUIT AT (E) PANEL BOARD. EXTEND CIRCUIT TO FEED NEW SIGNAL PULL BOX.

GENERAL NOTES

1. PROVIDE WEATHERPROOF SEALS FOR ALL PENETRATIONS.
2. PROVIDE FINAL CONNECTION FROM THE DISCONNECT SWITCHES TO THE A/C CONTROLLER. PROVIDE INDEPENDENT UNISTRUT SUPPORT FOR THE DISCONNECT SWITCH AND RECEPTACLE.
3. FOR CONDUIT RUNNING ON ROOF LEVEL SEE DETAIL 2/E-102

PACIFIC ENGINEERS GROUP
Consulting Electrical Engineers
11028 Victory Boulevard, Suite 201
North Hollywood, Ca. 91606-3720
(213) 877-5304 (818) 763-9189
FAX (818) 763-9180

BUILDING 500
POWER ROOF PLAN

CARMICHAEL-KEMP
ARCHITECTS
A.I.A.
2870 LOS FELIZ PLACE • LOS ANGELES • 213 665 1265

CONTRACTOR SHALL OBTAIN PLANS FROM OFFICE OF REGULATION SERVICES

APPL NO. 4-101196
FILE SS
AC
DATE DEC 14 1999

NEW SCIENCE BUILDING at MT. MIGUEL HIGH SCHOOL
1800 Sweetwater Road, Spring Valley, CA 91977

GROSSMONT UNION HIGH SCHOOL DISTRICT

JOB NO. 9622-1
DATE: 12-14-99
SHEET NUMBER
E-503
BIDDING ORDER 81 OF 82

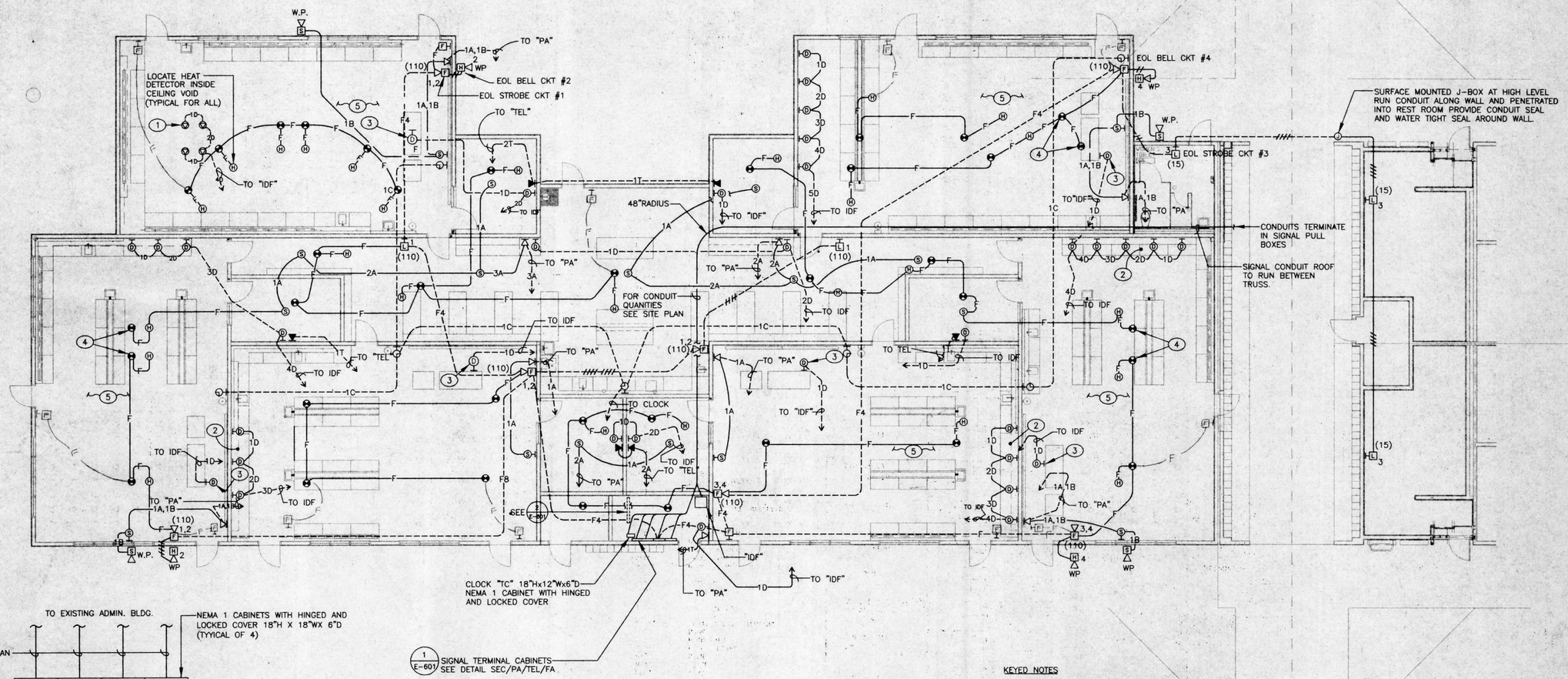

SIGNAL FLOOR PLAN

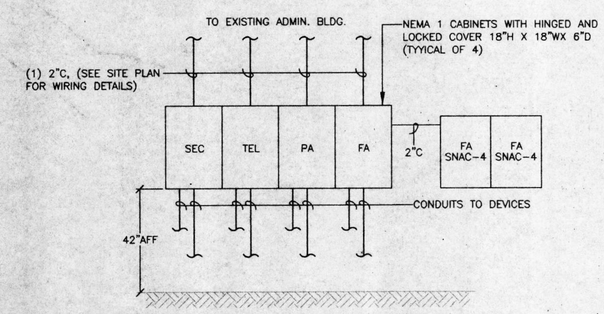

1/E-601 SYSTEMS TERMINAL CABINETS

N.T.S.

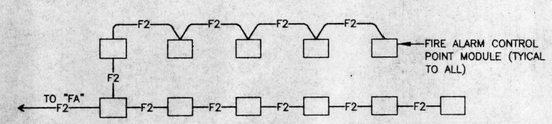

2/E-601 FIRE ALARM CONTROL POINT MODULE

N.T.S.

1. FIRE ALARM CONTROL POINT MODULE SHALL BE LOCATED INSIDE A NEMA 1 METAL ENCLOSURE, WALL MOUNTED ON THE WALL INSIDE ELECTRICAL ROOM.
2. SEE E105 FOR TYPICAL SINGLE LINE DIAGRAM AND E-501 FOR POWER CONNECTION FOR POWER CONNECTION TO RELAYS.
3. THE FIRE POINT CONTROL MODULES ARE CONNECTED TO CONTACTORS IN 2 GROUPS. FIRST CONTACTOR CONNECT TO (4) FIRE ALARM CONTROL POINT MODULE SECOND CONTACTOR CONNECT TO (7) FIRE ALARM CONTROL POINT MODULE MOUNT CONTROL POINT MODULES IN A NEMA 1 ENCLOSURE IN 2 CABINETS DIRECTLY ABOVE THE CONTACTOR ENCLOSURE.

KEYED NOTES

1. SEE ARCHITECTURAL DRAWING FOR EXACT LOCATION. OUTLETS FOR MOVEABLE COMPUTER CART.
2. COORDINATE WITH CASE WORK INSTALLER FOR CONDUIT AND DATA OUTLET INSTALLATION. COORDINATE CONDUIT STUB UP LOCATIONS AND ROUTING OF CONDUIT WITHIN CASE WORK. SECURE CONDUITS INSIDE WORK BENCH. MOUNT OUTLETS 6" ABOVE WORK TOP ALONG BACK SPLASH OF CASE WORK OR TO THE SHELF.. SEE ARCHITECTURAL DRAWINGS FOR LOCATIONS.
3. DATA JACK TO BE CONNECTED WITH FUTURE "TV" J-BOX, SEE KEYED NOTE #11 ON SHEET E-501. RUN (1) 1-1/4"C.O. FROM DATA JACK TO "TV" J-BOX.
4. SMOKE DETECTOR SHALL BE LOCATED AT 2' FROM THE HIGHEST POINT IN THE CEILING.
5. SMOKE DETECTORS WITHIN THIS ROOM SHALL BE PROGRAMMED IN A X-ZONE ARRANGEMENT SUCH THAT THERE MUST BE MORE THAN 2 DETECTORS BEING ACTIVATED BEFORE ACTIVATES AN ALARM IN THE FIRE ALARM CONTROL PANEL. THE SENSITIVITY OF EACH SMOKE DETECTOR SHALL BE ADJUSTED DURING THE DAY VIA PROGRAMMING AT THE FACP.

1/8"=1'-0"
0 2' 4' 8' 16' 32'

NORTH

PACIFIC ENGINEERS GROUP
Consulting Electrical Engineers
11028 Victory Boulevard, Suite 201
North Hollywood, Ca. 91606-3720
(213) 877-5304 (818) 763-9189
FAX (818) 763-9180

CARMICHAEL-KEMP ARCHITECTS A.I.A.

NEW SCIENCE BUILDING at MT. MIGUEL HIGH SCHOOL
1800 Sweetwater Road, Spring Valley, CA 91977
GROSSMONT UNION HIGH SCHOOL DISTRICT

SIGNAL FLOOR PLAN

JOB NO.	9822-1
DATE:	12-14-99
SHEET NUMBER	E-601
SHEET ORDER	82 of 82